Olin College of Engineering, ENGR 3330 – Mechanical Design

JimmyQC

A Moderately Complicated Humanoid Robot

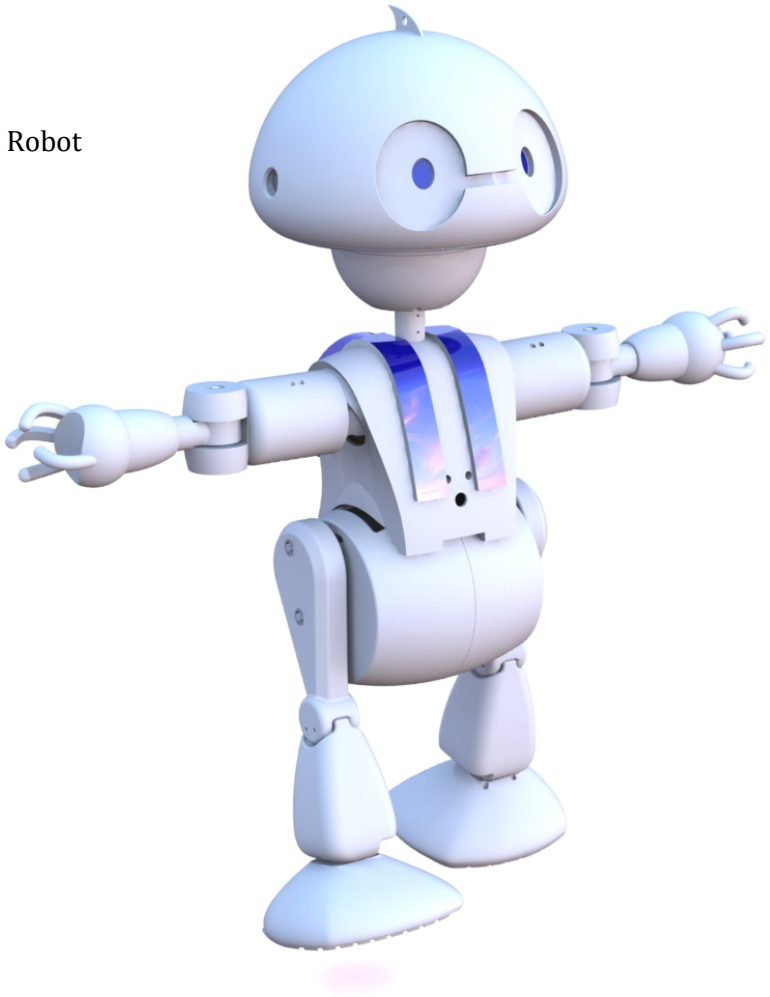

Jordan Burger, Christina Fong, Jennifer McConnell, Brendan Quinlivan, Brett Rowley , Dante Santos

Fall 2013

Contents

Abstract 2
Bill of Materials 3
Total Cost 3
3D Printed Parts 3
COTS Parts 5
Parts from Stock 7
Assembly Instructions (compiled by Jennifer McConnell) 9
Head Assembly Instructions (Jennifer McConnell) 9
Foot Assembly (Jordyn Burger) 16
Pelvis Assembly (Dante Santos) 20
Arm Assembly (Brendan Quinlivan) 32
Shoulder Assembly (Brett Rowley) 38
Torso/COM-Shifting Assembly Instructions (Christina Fong) 46
List of Parts to Print and Print Instructions 51

Abstract

Jimmy is a humanoid biped robot, created to change the robots of the future through personalization of features, intended for both personal and educational purposes. For this version of Jimmy, known as JimmyQC, we were given the task of creating a robot between 26 and 32 inches tall that contained four to eight motors. Ultimately, this version of Jimmy is approximately 27 inches tall, uses a total of seven motors, and costs approximately $1,228. The motors used for this system are all dynamixels taken from robotis.com, consisting of six AX-12s and a single MX-64. The battery used to power these motors is located in a custom backpack. The electronics that drive the 'smarts' of Jimmy are located inside of the head. There are two goals that drove the design of JimmyQC: making him walk and giving him character.

The first and most important of these two goals is making Jimmy walk. Given the size and motor limitations, this walking motion was designed to maximize the number of motions per each motor. To move each foot, the Joe Klann linkage system is used, raising the legs in a way that leads to the foot moving in an oval-like path. The leg itself is treated as a single linkage, keeping the foot parallel to the ground. This linkage system also allowed for minimal modifications to the overall shapes of the body parts, though the pelvis is large to fit this system and the MX 64 that drives the walking and arms. The motion of the legs alternate between one another as the motor rotates, located between the two legs in the pelvis.

To help move Jimmy's center of mass, the arms also swing. This swinging motion is coupled with the motion of the legs via a pulley on a shaft connected between the pelvis and torso by a timing belt; therefore, the motor that drives the legs also drives the swinging of the arms. The shifting of the center of mass (COM) is done by a four bar linkage system, driven by an AX-12 motor. This system shifts the weight of the robot horizontally in order to keep the COM over the foot polygon. This prevents Jimmy from falling as he walks. This system allows for dynamic control of the COM, which can be used to correct for wobbling or tipping over. The turning mechanism lies in the bottom of Jimmy's left foot. This turning rotates the base of the foot, designed to not interfere with the walking linkage system.

The second goal of JimmyQC focuses on giving Jimmy character. This manifested in a few different ways throughout the robot. To do this, a single motor directly drives the rotation of Jimmy's head. As mentioned, Jimmy's arms swing; they also move away from the body. This is driven using gears by two AX-12s, one in each shoulder. Each of the elbows contains an AX-12, which uses gears to allow for a bending motion similar to a wave. The hand is a solid body and was unmodified in this version of Jimmy, but moves when the elbow bends. Together, these systems help give JimmyQC a sense of self.

Bill of Materials

Below is a bill of material outlining the 3D printed, COTS (Commercial off the Shelf) parts, and parts machined from stock

Total Cost

	Cost
3D Printed Parts	$252.55
COTS Parts	$949.11
Parts Machined From Stock	$27.32
Total	$1,228.98

3D Printed Parts

ITEM NO.	PART NUMBER	DESCRIPTION	QTY	UNIT COST	TOTAL (Assuming 1in^3=$0.75)
1	JimmyQC_1001_RightFootBottom	Bottom of foot	2	5.22	7.83
2	JimmyQC_1002_RightFoot_TopFront	Front Half of Top Part of Foot	2	13.83	20.75
3	JimmyQC_1003_RightFoot_TopBack	Back Half of Top Part of Foot	2	14.82	22.23
4	JimmyQC_2001_Thigh	Thigh	2	4.13	6.195
5	JimmyQC_2002_Shin	Shin	2	10.72	16.08
6	JimmyQC_3001L_Bottom	Bottom	1	13.39	10.04
7	JimmyQC_3001R_Botto m	Bottom	1	13.39	10.04
8	JimmyQC_3002_Rocker1	Upper Rocker	2	0.3	0.45
9	JimmyQC_3003_Rocker2	Lower Rocker	2	0.34	0.51
10	JimmyQC_3004_Rocker3	Horizontal Rocker	2	0.44	0.66
11	JimmyQC_3005_Rocker4	Driving Linkage	2	0.09	0.135

12	JimmyQC_3101_Motor_Mount	Motor Mount for the Pelvis	1	3.58	2.685
13	JimmyQC_4001_Bicep	Posterior Bicep	2	4.93	7.395
14	JimmyQC_4001_Bicep	Anterior Bicep	2	4.37	6.555
15	JimmyQC_4002_Motor_Gear	Motor Gear	2	0.31	0.465
16	JimmyQC_4003_Forearm_Gear	Forearm and Hand	2	0.36	0.54
17	JimmyQC_4005_Forearm_and_Hand	Forearm and Hand	2	8.39	12.585
18	JimmyQC_4006_Shoulder_Gimble	Shoulder Gimble	2	1.59	2.385
19	JimmyQC_5001_Shoulder_Motor_Mount	Right Motor Mount	2	2.05	3.075
20	JimmyQC_5009_Shoulder_Gear	ShoulderGear	2	0.19	0.285
21	JimmyQC_6001_Neck	Neck	1	0.42	0.315
22	JimmyQC_6101_Motor Attachment	Hub-shaft Interface	1	0.62	0.465
23	JimmyQC_6201_ChinTop	Chin Top	1	4.63	3.4725
24	JimmyQC_6202_ChinBottom	Bottom Piece of Chin	1	5.04	3.78
25	JimmyQC_6301_HeadTop	Top Piece of Head	1	114.04	85.53
26	JimmyQC_6302_HeadBottom	Bottom Piece of Head	1	11.59	8.6925
27	JimmyQC_7011_ShortGearMount	Motor Horn to Gear Connector	1	1.9	1.425
28	JimmyQC_9006L_Torso	Left Half of Torso	1	11.99	8.9925
29	JimmyQC_9006R_Torso	Right Half of Torso	1	11.99	8.9925
	Total Cost				252.55

COTS Parts

ITEM NO.	PART NUMBER	DESCRIPTION	QTY.	VENDOR	UNIT PRICE	TOTAL COST
30	JimmyQC_5002_Shoulder_Torso_Shaft	Pivoting shaft for shoulder swinging	1	McMaster	3.82	3.82
31	JimmyQC_5003_Shoulder_Arm_Shaft	Shaft to pin upper arm to shoulder motor	2	McMaster	3.82	7.64
32	JimmyQC_92373A178	1/8"x5/16" Spring Pin	6	McMaster	0.0496	0.2976
33	JimmyQC_4012_Shoulder_Pulley	Shoulder Pulley	4	SDPSI	2.78	11.12
34	JimmyQC_7006_COM_LargeGear	Large gear for the COM system	1	SDPSI	2.19	2.19
35	JimmyQC_7007_COM_SmallGear	Small Gear for the COM system	1	SPDSI	2.29	2.29
36	JimmyQC_MX-106R	Robotis RX-64 Dynamixel Motor	1	Robotis	279	279
37	JIMMYQC_8100_AX_12_Motor	Robotis AX-12 Motor	7	Robotis	45	315
38	JimmyQC_8200_Battery	Battery	1	Reedy	90	90
39	JimmyQC_8300_Arbotix	Arbotix-M Microcontroller	1	Trossen	130	130
40	JimmyQC_8400_IR	Sharp Proximity IR Sensor 25MM	3	Digikey	1.183	3.549
41	JimmyQC_9001_0.1875_Screw	2-56, 3/16" Pan Head Phillips Machine Screw	4	McMaster	0.0121	0.0484
42	JimmyQC_9003_AX12_MountingScrew	M3x10 Phillips Head Screw	8	Robotis	Comes with AX12 Motor	0
43	JimmyQC_9005_AX12_MountingNut	M2.5 NUT	76	Robotis	Comes with AX12 Motor	0
44	JimmyQC_9008_0.25Shaft_BallBearing	1/4" Ball Bearing	4	McMaster	6.38	25.52

45	JIMMYQC_9008_MachineScrew_M2.5x10	Pan Head Phillips Machine Screw, M2.5, L 10 mm	32	McMaster	0.0736	2.3552
46	JimmyQC_9009_2-56_0.5_screw	2-56x1/2" screw	6	McMaster	0.0529	0.3174
47	JimmyQC_9010_Spring Pin_0.0625D_1L	Spring pin	2	McMaster	0.1058	0.2116
48	JimmyQC_9011_Spring Pin_0.125D_1.75L	Spring pin	5	McMaster	0.1546	0.773
49	JimmyQC_9012_AX12_MountingScrew_Long	M2x12mm	36	McMaster	0.0413	1.4868
50	JimmyQC_9013_AX12_MountingWasher	M2 washer	64	McMaster	0.0149	0.9536
51	JimmyQC_9014_0.25_RetainingRing	1/4" Retaining Ring	41	McMaster	0.0555	2.2755
52	JimmyQC_9015_MachineScrew_M2.5x8	M2.5x8mm Machine Screw	32	McMaster	0.0413	1.3216
53	JimmyQC_9016_HipBearing	Hip Ball Bearing	10	McMaster	3.17	31.7
54	JimmyQC_9017_0.25_0.375_Sleve_Bearing	Bushing for 1/4 in shaft, 3/8 in long	12	McMaster	0.81	9.72
55	JimmyQC_9019_0.25Shaft_BallBearing_Flanged	0.25" shaft flanged ball bearing	1	McMaster	6.38	6.38
56	JimmyQC_9020_Spring Pin_0.0625D_0.5L	1/16"D spring pin, 0.5"L	3	McMaster	0.0678	0.2034
57	JimmyQC_9021_2_56_Threaded_Inserts	2-56 Threaded Inserts	22	McMaster	0.0928	2.0416
58	JimmyQC_9022_1_4_ID_washer	.25" ID Nylon Washer	14	McMaster	0.0595	0.833
59	JimmyQC_9023_1_4_ID_bushing	1/4" ID x 1/4" Long Sleeve Bearing	2	McMaster	0.74	1.48
60	JimmyQC_9024_1_16_OD_pin	1/16" OD Spring Pin	4	McMaster	0.0273	0.1092
61	JimmyQC_9025_3_16_ID_ball_bearing	3/16" ID Miniature Ball Bearing	4	McMaster	4.06	16.24
62	JimmyQC_9026_3_16_ID_Retaining_Ring	3/16" ID Retaining Ring	6	McMaster	0.039	0.234
	Total Cost					949.11

Parts from Stock

ITEM NO.	PART NUMBER	DESCRIPTION	QTY	STOCK MATERIAL	UNIT COST	TOTAL COST
63	JimmyQC_3006_Drive_ Shaft	Pelvis Drive Shaft	1	1/4" Hardened Steel Shaft	1	1
64	JimmyQC_3007_Internal_Shaft	Internal Shaft	4	1/4" Hardened Steel Shaft	1	4
65	JimmyQC_3008_External_Shaft	External Shaft	4	1/4" Hardened Steel Shaft	1	4
66	JimmyQC_3009_Short_ Shaft	Short Shaft	4	1/4" Hardened Steel Shaft	1	4
67	JimmyQC_5004_Shoulder_Linkage_S haft	3/16" Shaft for Shoulder Swinging Linkage	2	3/16" Hardened Steel Shaft	1	2
68	JimmyQC_5005_Linkage_Linkage_Sh aft	3/16" OD Shaft	2	3/16" Hardened Steel Shaft	1	2
69	JimmyQC_5006_Shoulder_Drive_Sha ft	Shoulder Pulley Shaft	1	1/4" Hardened Steel Shaft	1	1
70	JimmyQC_5007_Long_Shoulder_Link age	Shoulder Link	2	1/8" BY 1/2" Carbon Steel	0.12	0.24
71	JimmyQC_5008_Short_Shoulder_Link age	Hub to Actuate the Shoulder Linkages	2	1/8" BY 1/2" Carbon Steel	0.12	0.24
72	JimmyQC_6102_MotorShaft	Driving Shaft	1	1/4" Hardened Steel Shaft	0.12	0.12
73	JimmyQC_7001_COM_LinkLong	Long Link of 4-bar COM Shifting Linkage	3	1/8" BY 1/2" Carbon Steel	0.12	0.36
74	JimmyQC_7002_COM_LinkShort	Short Link of 4-bar COM Shifting Linkage	2	1/8" BY 1/2" Carbon Steel	0.12	0.24
75	JimmyQC_7003_COM_LinkShaft	1/4 Shaft for COM Shifting 4-bar Linkage	1	1/4" Hardened Steel Shaft	1	1
76	jimmyQC_7008_COM_DriveLink	Long Driven Link of 4-bar COM Shifting Linkage	1	1/8" BY 1/2" Carbon Steel	0.12	0.12
77	JimmyQC_7009_COM_DriveShaft	1/4" Shaft for Driving Linkage	1	1/4" Hardened Steel Shaft	1	1
78	JimmyQC_7010_ShortShaft	1/4" shaft for Suspending Weight	4	1/4" Hardened Steel Shaft	1	4

79	JimmyQC_4004_Elbow_Pin	1/4" Steel Pin for Elbow	2	1/4" Hardened Steel Shaft	1	2
Total Cost					27.32	

Assembly Instructions (compiled by Jennifer McConnell)

There are several sub-assemblies in Jimmy QC that can be assembled independently from the rest of the body, whereas some are dependent on each other. The order of assembly is:

1. Head
2. Feet
3. Pelvis/Legs
4. Pelvis/Legs Integrated with Feet
5. Arms
6. Shoulder Integrated with Arms
7. Torso
8. Full Body Assembly

Head Assembly Instructions (Jennifer McConnell)

Motor Assembly

To begin, the motor assembly must be built. Start with the AX-12 servo horn detached from the motor itself, and screw the motor horn into the motor attachment piece using M2X12mm bolts, washers, and nuts. Top and bottom views of this subassembly are shown below.

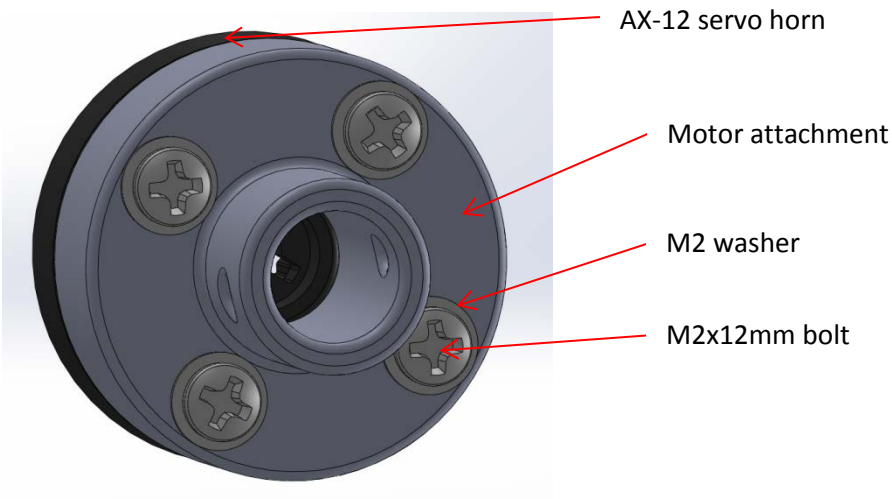

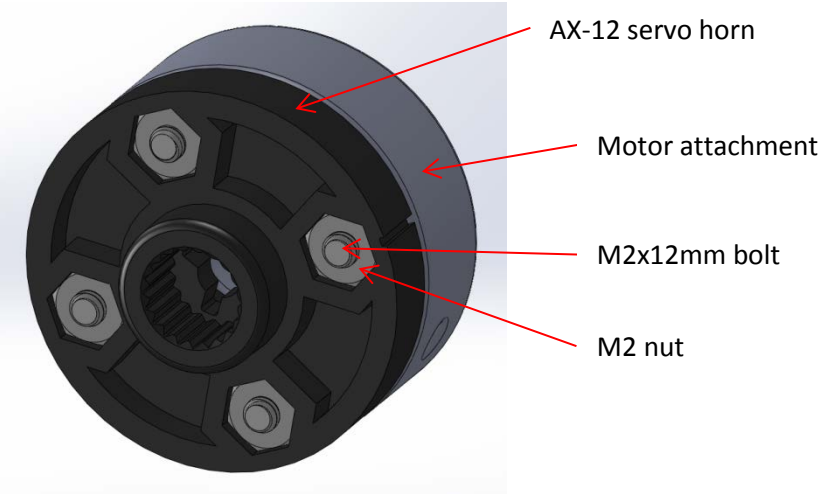

Next attach the horn to the motor itself using the M3 screw provided.

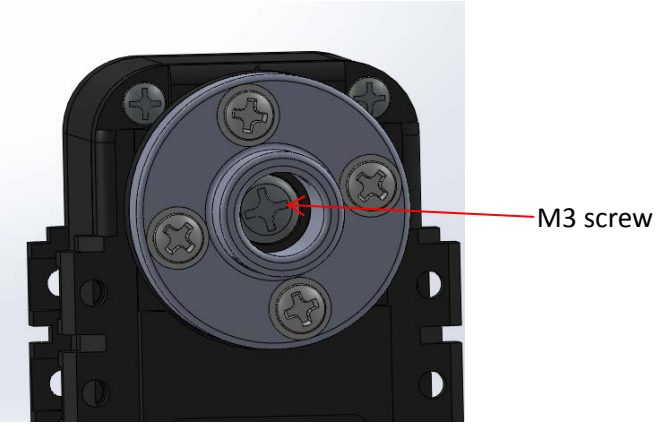

The motor shaft goes on next, and is attached with a 1/16” diameter, 0.5” long spring pin to the motor attachment piece. The smaller hole on the motor shaft is the one that should be used, as this is the one that fits with the 1/16” spring pin.

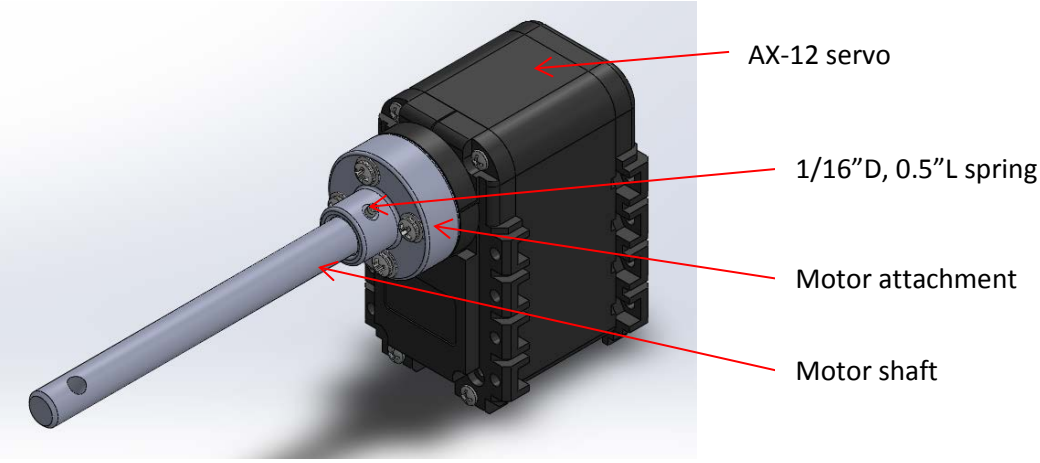

The motor assembly is now complete.

Chin Assembly

The next portion is the chin assembly. First, attach the motor assembly to the bottom portion of the chin using M2x12mm bolts, washers, and nuts, inserting the bolts through the bottom of the chin and attaching them with nuts that are coincident to the bolt holes on the motors. Views of both the bottom and top of the chin are shown below. The cables from the motor should be threaded through the hole at the bottom of the chin, as seen in the bottom view.

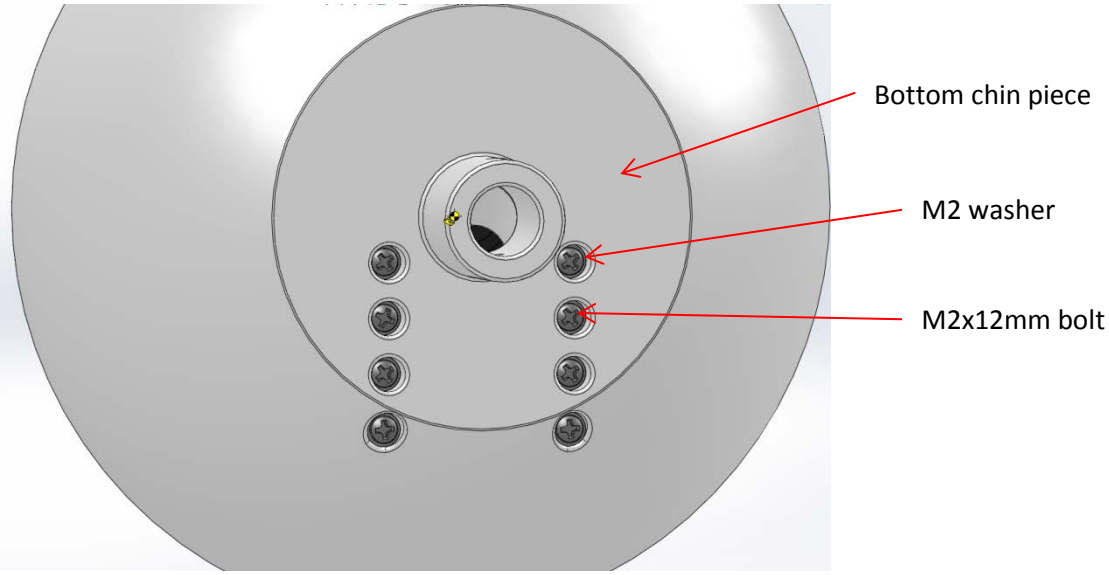

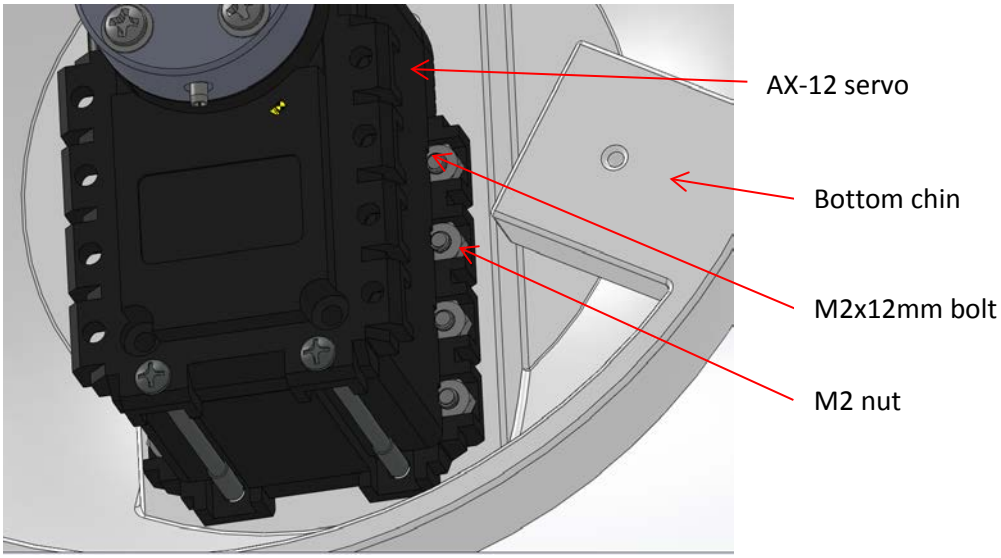

The top and bottom chin are attached using #2-56, 0.5” length screws. To secure these into the bottom of the chin, use threaded inserts; these should be put into the chin using a soldering iron to melt the plastic around the threaded insert. The fasteners are shown in yellow in the figure below.

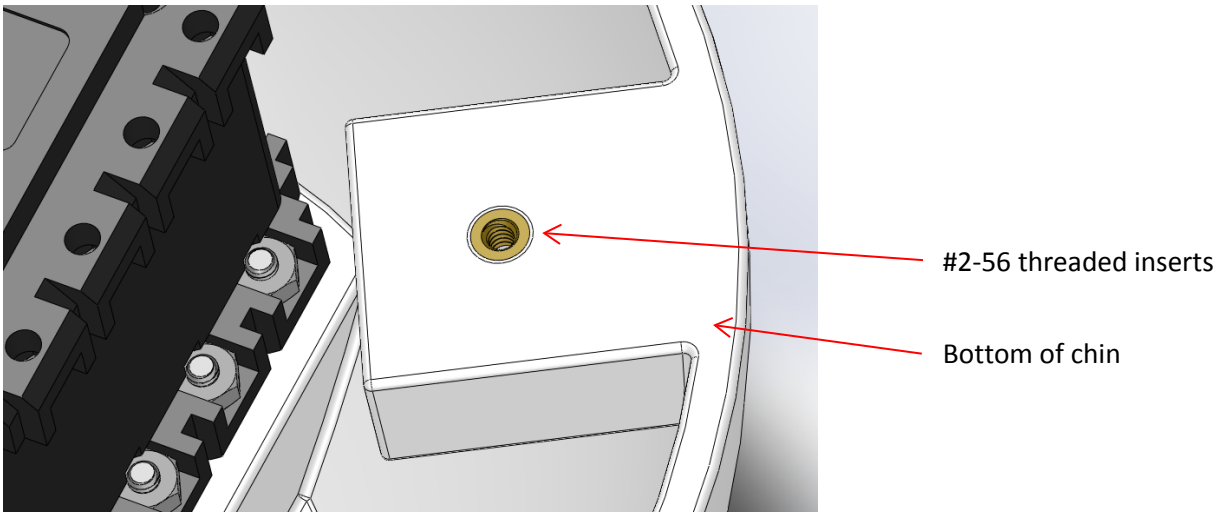

The next step in the assembly is attaching the top of the chin to the bottom of the chin. To do this, first threaded inserts must be put into the top of the chin in the same way that they were put into the bottom of the chin. They should lie flush with the lowest face on the top of chin piece (see figure below).

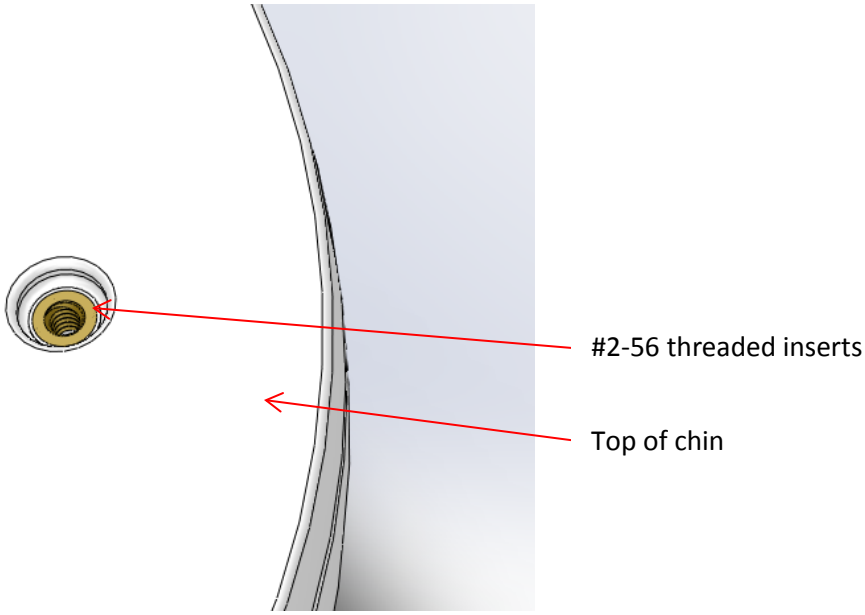

Secure the top piece of the chin to the bottom piece using three #2-56, 0.5” length screws. Cover the entire top of the chin with Teflon tape to reduce the friction from the head sliding against it.

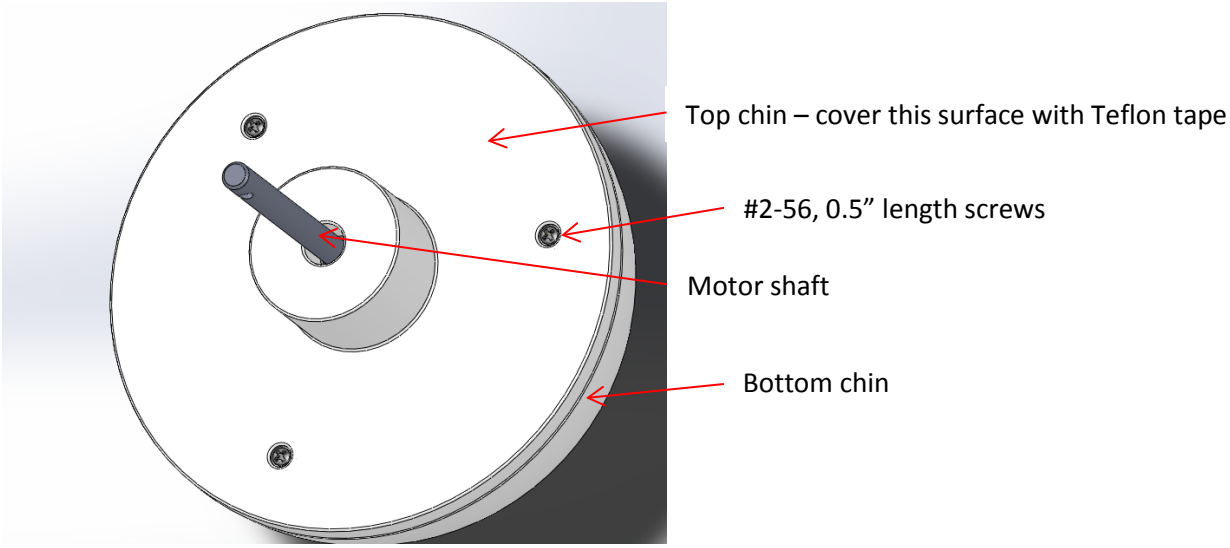

Lastly, add a ball bearing to ensure that the shaft is supported within the chin assembly. The flanged ball bearing to be added has a 0.25” inner diameter and 0.375” outer diameter, and should be press fit into the top of the top chin piece. The chin assembly is now complete.

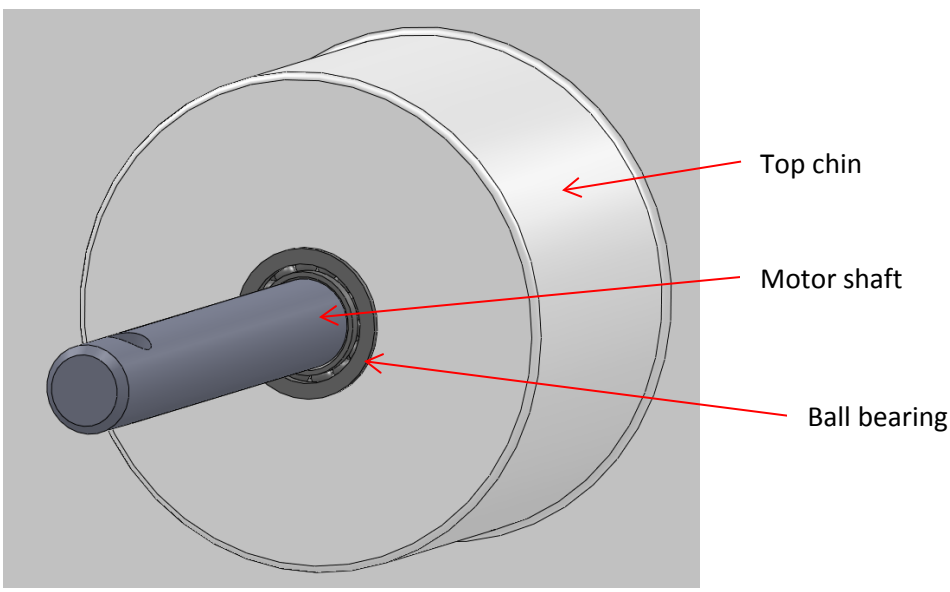

Head Assembly

The final part of the assembly is the head portion. First cover the bottom portion of the head with Teflon to reduce friction as it slides over the top portion of the chin. Next secure the bottom portion of the head to the motor shaft using a 1/8” diameter, 1.75” long spring pin, as seen below. This will allow for the head to move with the motor shaft. Put three #2-56 threaded inserts into the bottom head piece in the same method used for the chin.

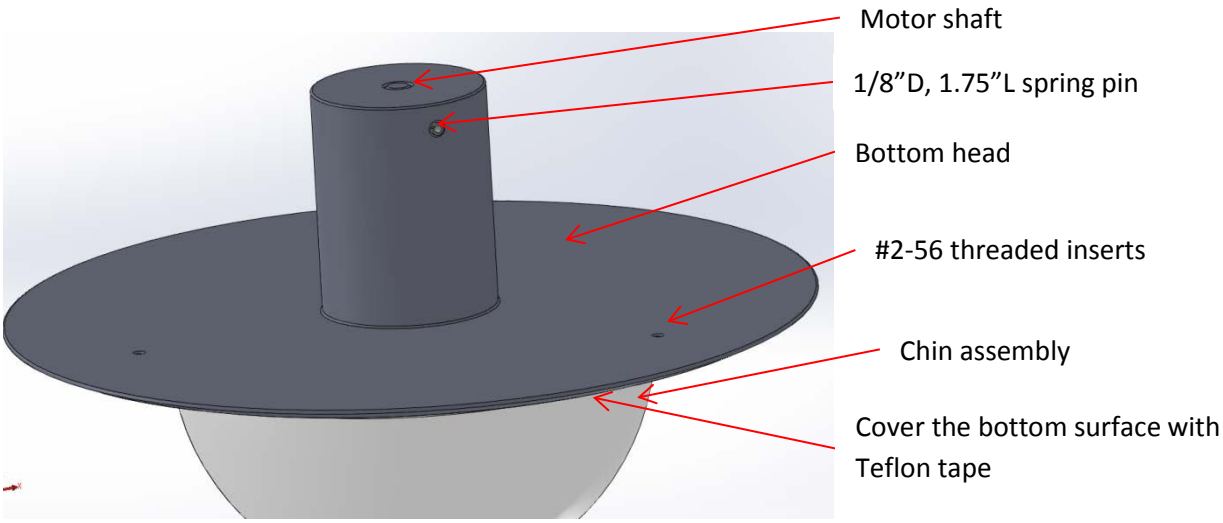

Before attaching the top portion of the head, first put three #2-56 threaded inserts into the holes shown.

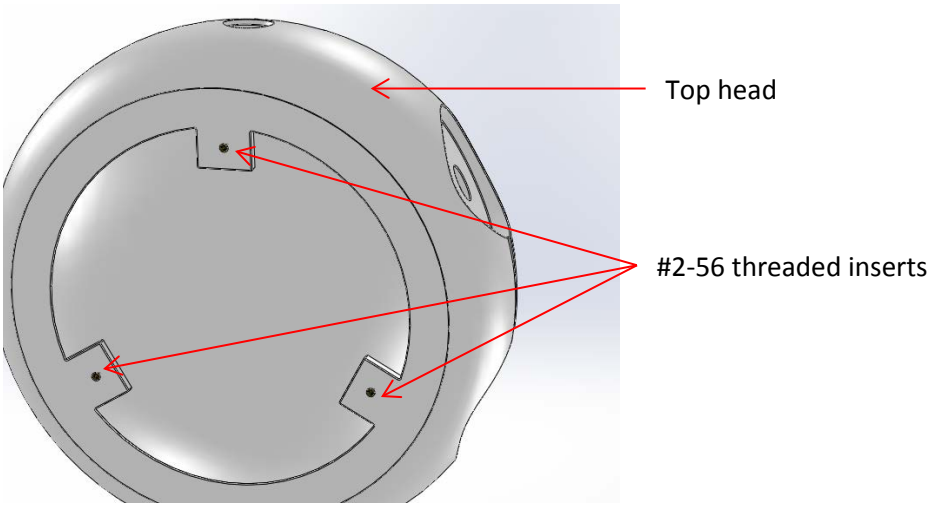

Now attach the top portion of the head. The sensor suite lives in the head; place desired sensors in the head and run desired cables through the bottom of the neck hole. The top piece is attached to the bottom piece using three #2-56, 0.5” length screws that are screwed in from the bottom of the bottom piece up into the top piece. This ensures that the top of the head rotates with the bottom of the head, which is rotating with the motor shaft.

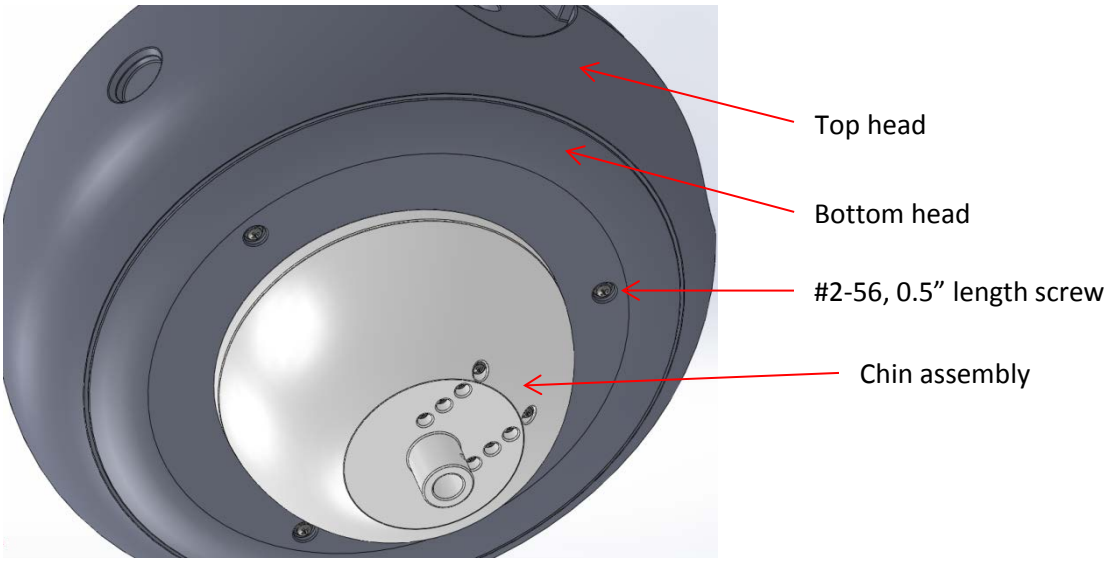

The head assembly then connects through the neck with a 1/16” diameter, 1” long spring pin, which can be seen in the figure below.

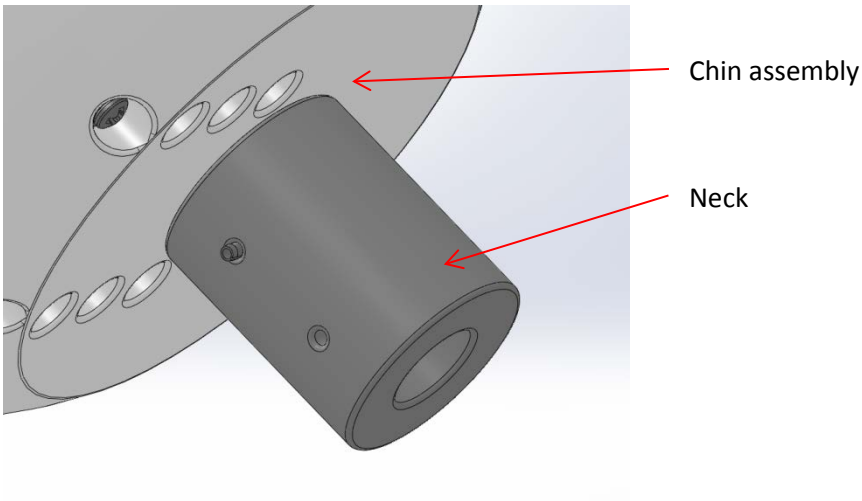

The through hole on the neck is not the same size on both ends; the chin piece should fit closely into the larger hole on the neck. Shown below is a transparent view of the neck to visualize this – the blue transparent piece is the neck, and the white solid piece is the extrusion from the chin.

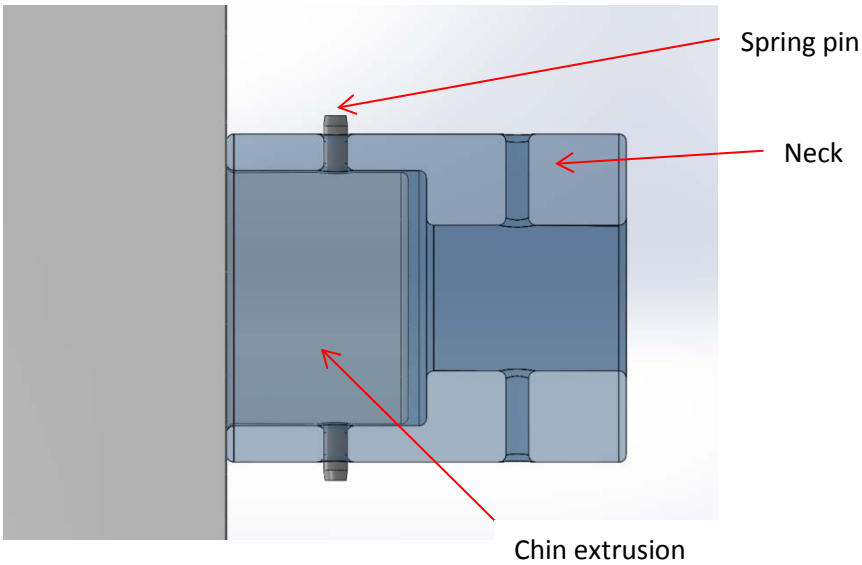

Place the head assembly aside. It will later be attached to the rest of the Jimmy assembly.

Foot Assembly (Jordyn Burger)

The next assemblies to build are the feet assemblies. First, attach the servo horn to the foot. To attach the servo horn to the foot, place the servo horn in the cutout of JimmyQC_1001_RightFootBottom, as seen below.

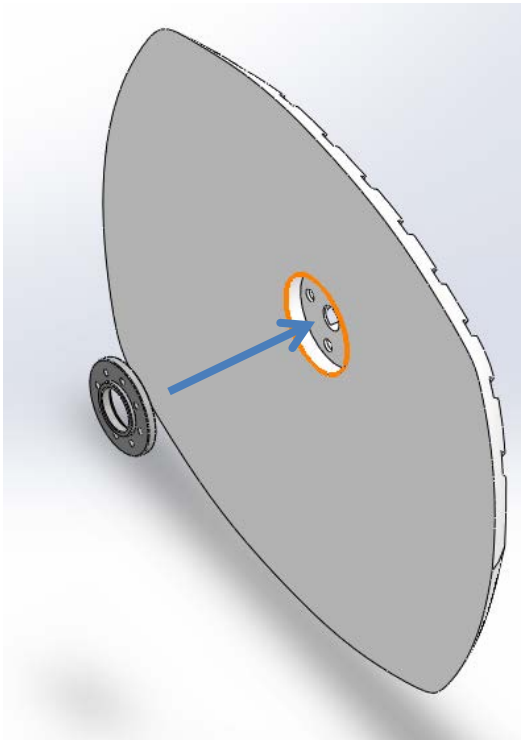

Next attach the servo horn to the base of the foot using 4 Pan Head Phillips Machine Screws (M2X6), with washers between the top of the screw and the servo horn.

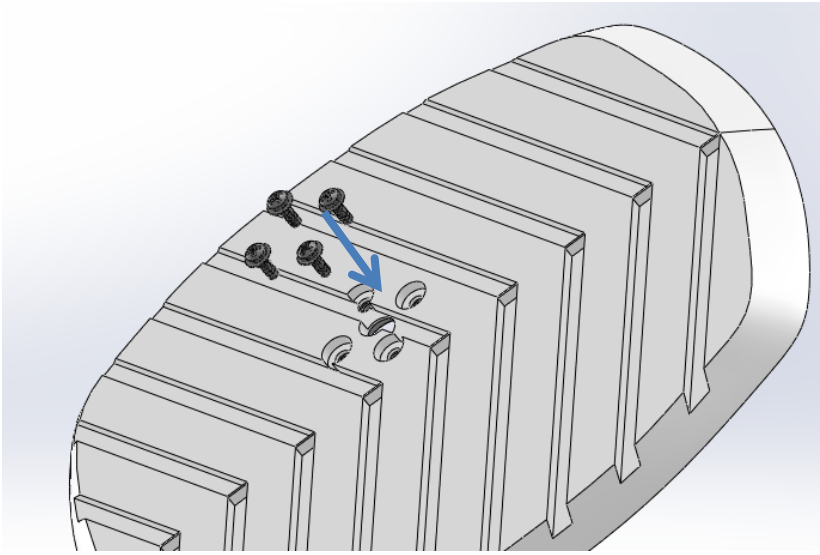

Screw one Steel Hex Nut (M2x6) to the back end of each mounting screw

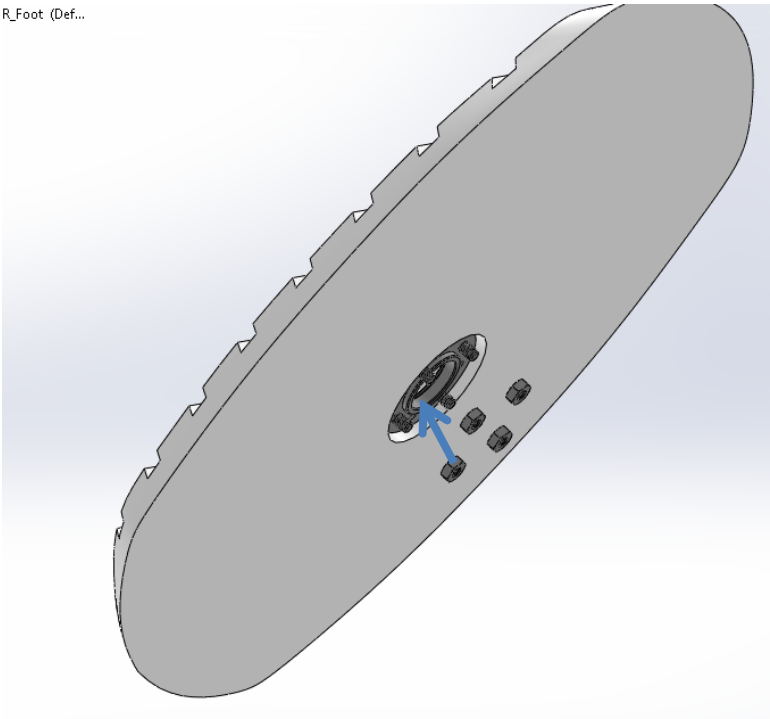

Place the servo into JimmyQC_1002_RightFoot_TopFront such that the holes for mounting the sides of the motor line up with the pilot holes in the foot.

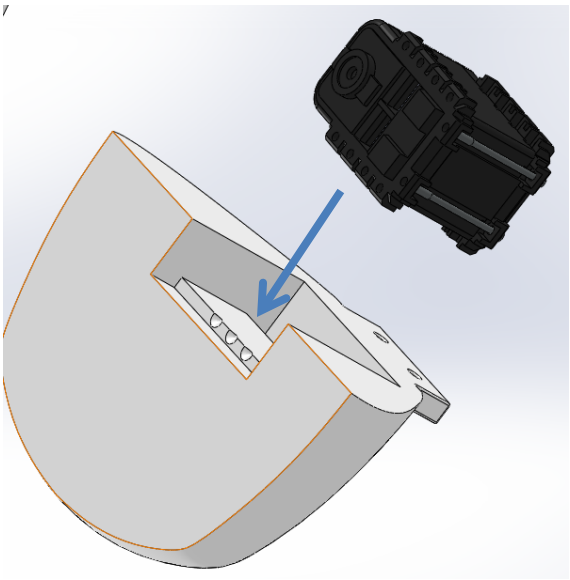

Attach the servo using 8 M2.5 screws through the pilot holes.

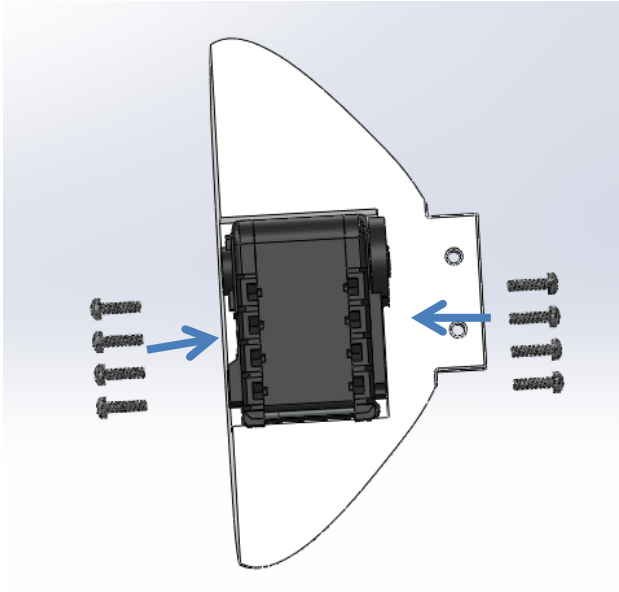

Repeat steps 4-5 to attach JimmyQC_1003_RightFoot_TopBack to the servo.

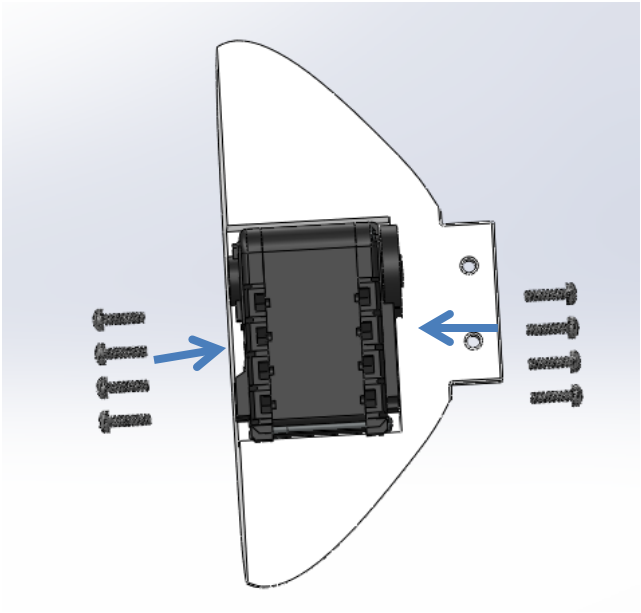

Cover the flat surface of the JimmyQC_1001_RightFootBottom with Teflon tape, as well as the flat surface of JimmyQC_1002_RightFoot_TopFront and JimmyQC_1003_RightFoot_TopBack. Finally, join the top and bottom of the foot by mounting the servo horn to the servo.

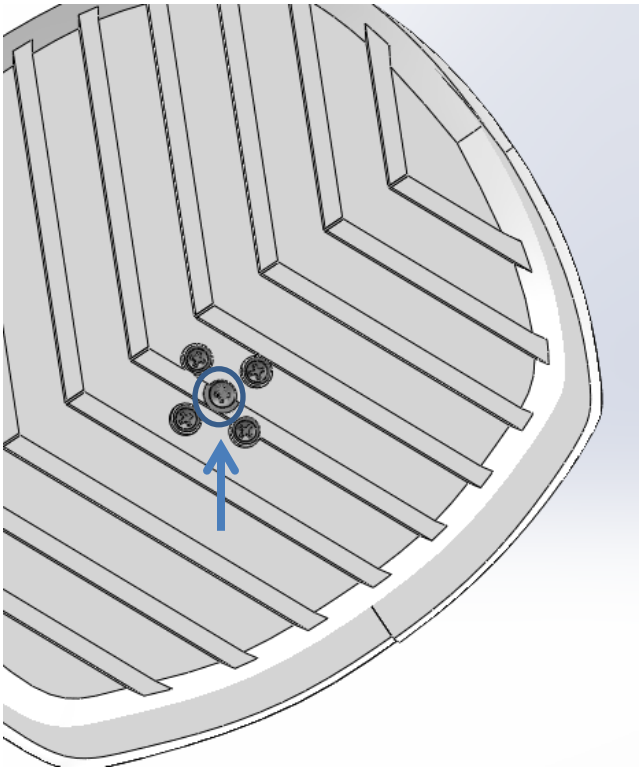

Place the assembled feet aside.

Pelvis Assembly (Dante Santos)

Overview

There are three major systems in the Pelvis/Leg assembly: the legs, the motor, and the linkages that run between them. These three systems are constrained by the "bottom" which comes in two halves that clam-shell together. The legs and motor each have their own sub-assemblies and should be assembled first. The linkages are housed inside the "bottom" pieces between the outer wall and the inner supporting wall. These can be put in place then fixed to the adjoining leg. The same process can be repeated for the opposite side. The motor assembly should be bolted into the assembled half of the pelvis/leg system and the belts positioned appropriately on the shaft and motor horn. At this point, the wire should be routed to the foot. The two halves should be popped together and the motor completely bolted in. The systems should then be ready to be connected to the torso and feet.

There are a few parts that need to be machined before assembly, these are PART NAMES. They are all hardened steel shafts that need groves in the ends for retaining rings. Some of them also need holes drilled for spring pins. It should be noted that the space between the retaining rings and the angle between the spring pin holes needs to be fairly accurate (+/- .005 in) in order for everything to fit and work properly.

Step-by-step

The first step once you get your parts out of the printer is to press fit the specified bearings into the parts. The tolerance on the RP Plastic should be enough that you are able to, with sufficient force, manually press the bearings into place. Make sure to be careful about where on the bearing you are applying the force, as parts of it cannot sustain lateral loads.

There are two types of bearings in JimmyQC's pelvis design, a ball bearing (JimmyQC_9019_0.25Shaft_BallBearing_Flanged) and a sleeve bearing (JimmyQC_9017_0.25_0.375_Sleve_Bearing). The ball bearings should be inserted in the five circular holes in the "bottom" pieces. The flange should be on the side away from where the linkages will go, which is the easiest way to insert them. The sleeve bearings should be pressed into the two larger holes in linkage 3 as well as both holes in the thigh. These can be seen in Figure 1P and 2P.

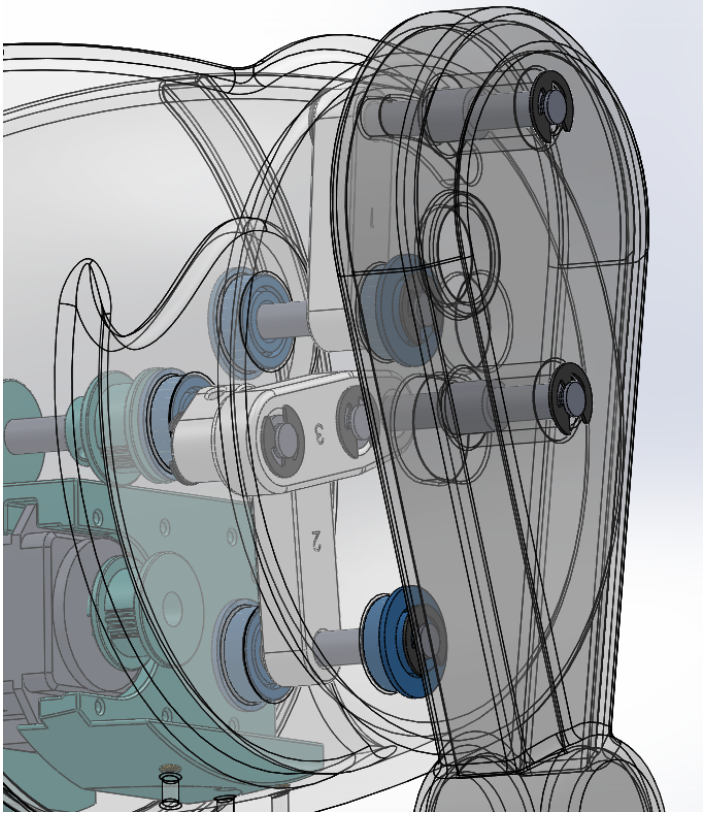

Figure 1P, The placement of Ball Bearings.

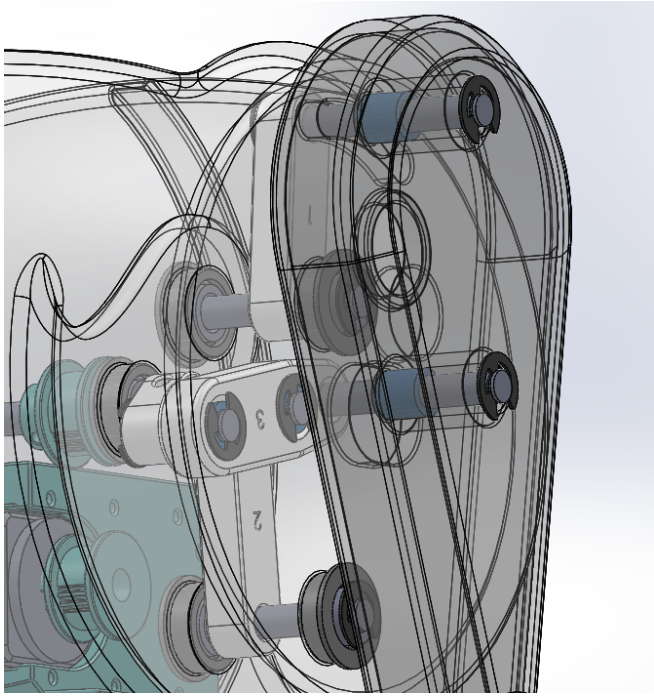

Figure 2P, The placement of Sleeve Bearings.

The Legs

Because the legs have fixed joints at the knee and ankle, these parts can be assembled easily before the main pelvis assembly then attached when needed. To assemble the Thigh, Shin, and Foot simply slot the pieces together as shown in Figure 3P, and set two 1/8" spring pins into their holes. Make sure that the pins pass fully through the inner tab and out into the outer body to guarantee a good connection.

Figure 3P, Connecting the Thigh to the Shin.

The Thigh and Shin parts are symmetric. The parts should be printed twice, one for each side, and they do not prefer one side of the body over the other. The feet, however, are side-specific. Their connecting pieces are not. For more information about assembling the feet, see the bottom of this section.

The Motor

The motor sub-assembly has two major functions - first, to hold the motor fixed with regards to the pelvis in order to properly actuate the leg and arm swinging motion, and second, to fix the two halves of the bottom such that they do not come apart laterally.

To assemble, first attach the pulley hub (JimmyQC_5010_Shoulder_Pulley) to the motor's shaft and then screw the motor into the mount using the screws that came with the motor as shown in Figure 4P. The holes on the curved surface of the mount will fix it to the two halves of the bottom, but not until all of the linkages are in place.

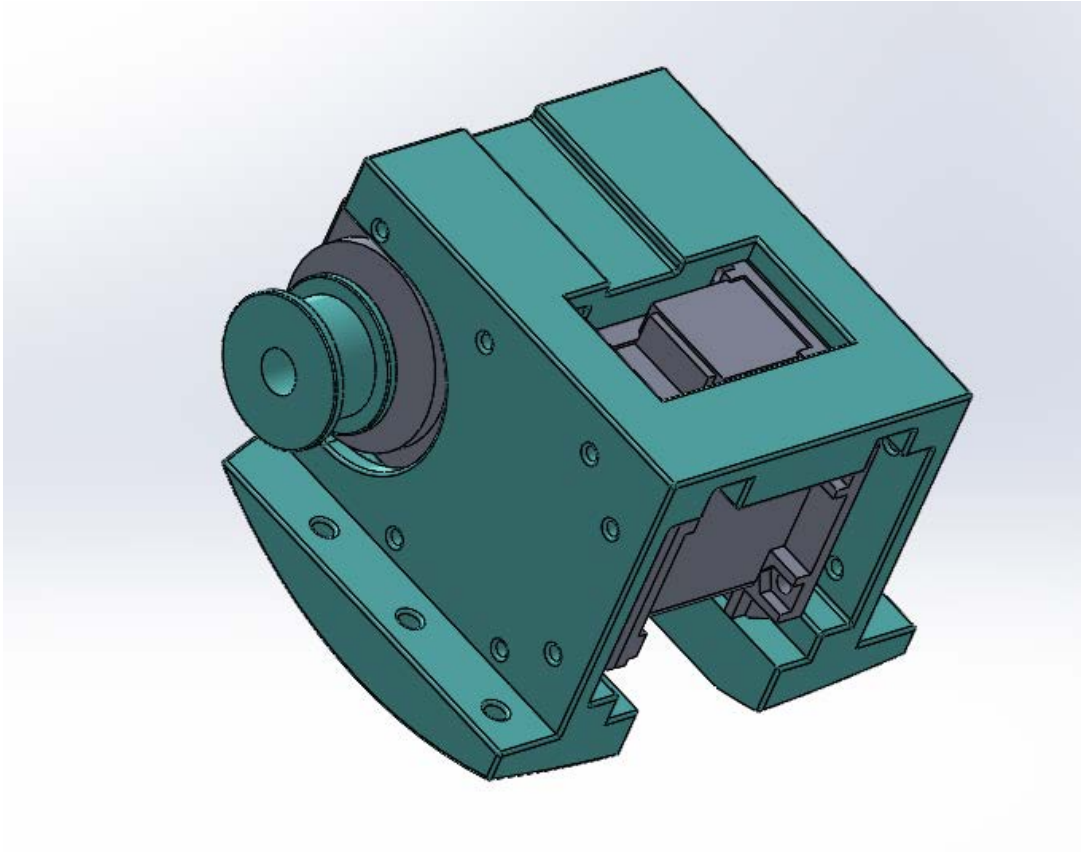

Figure 4P, The Motor Mount Sub-Assembly.

The Linkages

After assembling the Legs and the Motor, the next step is to assemble the linkage system. This is a Joe Klann walking mechanism, and therefore the leg is not rotating about a single fixed point. Rather, it is attached to the end of two linkages, one of which is a passive rocker to constrain the angle of the leg and the other is driven by a combination of a passive rocker and a offset hub on a drive shaft. This produces a very accurate gait cycle, but makes for a fairly complicated linkage system that, unfortunately, is rather oddly cantilevered.

The first step in assembling the linkage system is putting the pulleys on the drive shaft. The drive shaft is "JimmyQC_3006_Drive_Shaft" and the pulleys are "JimmyQC_5010_Shoulder_Pulley". Assemble them as shown in Figure 5P, and be very careful about the orientation of the pulleys. If the pulleys are put on backwards, nothing will fit together and your belts will not align.

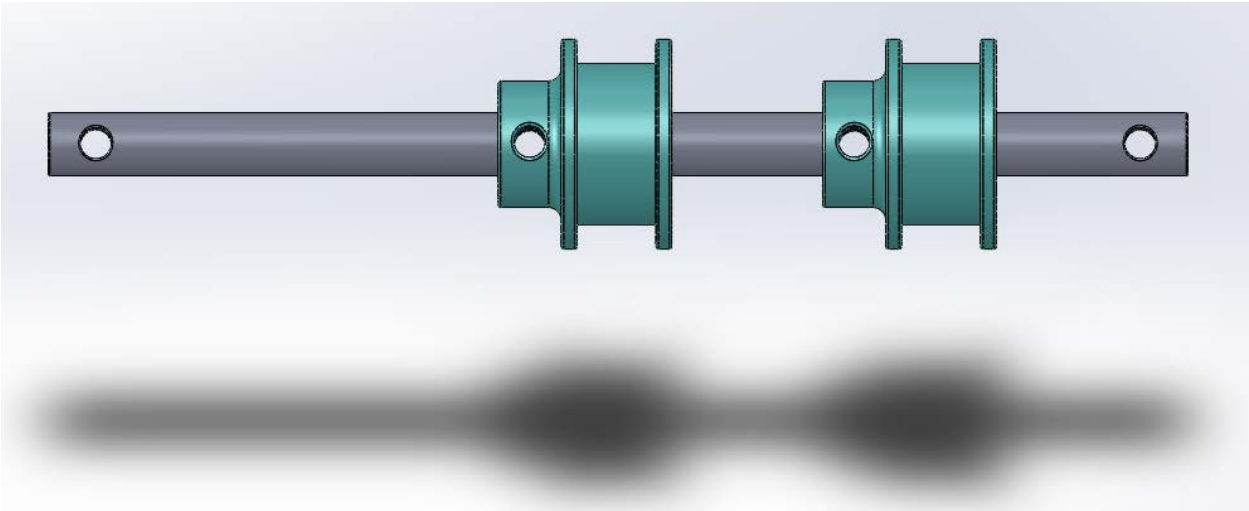

Figure 5P, The Drive Shaft and Pulleys.

Next, attach linkages 2 and 4 (JimmyQC_3003_Rocker2 and JimmyQC_3005_Rocker4) to 3 (JimmyQC_3004_Rocker3) using the short shaft (JimmyQC_3009_Short_Shaft) as shown in Figure 6P. Use the retaining rings (JimmyQC_9014_0.25_RetainingRing) to constrain them. The same assembly should be mirrored and repeated for the other leg.

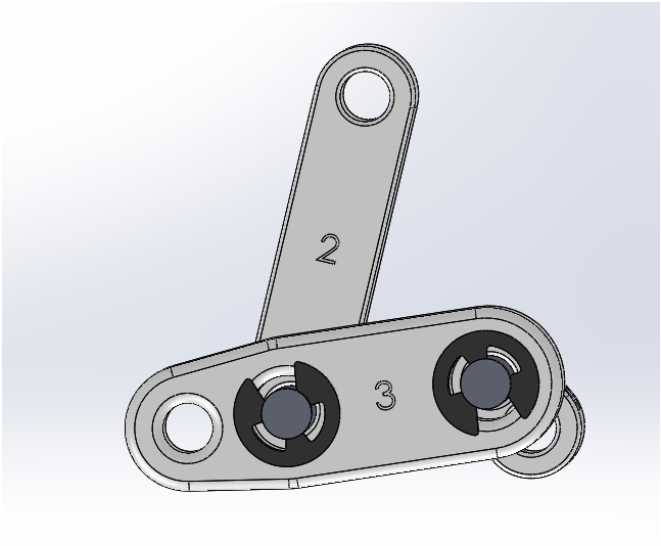

Figure 6P, Connecting Linkages 2, 3, and 4.

Using the internal shaft (JimmyQC_3007_Internal_Shaft) and retaining rings, fix the first and second linkage (and therefore also linkages 3 and 4) into the bottom as shown in Figure 7P. Again, repeat on the other side.

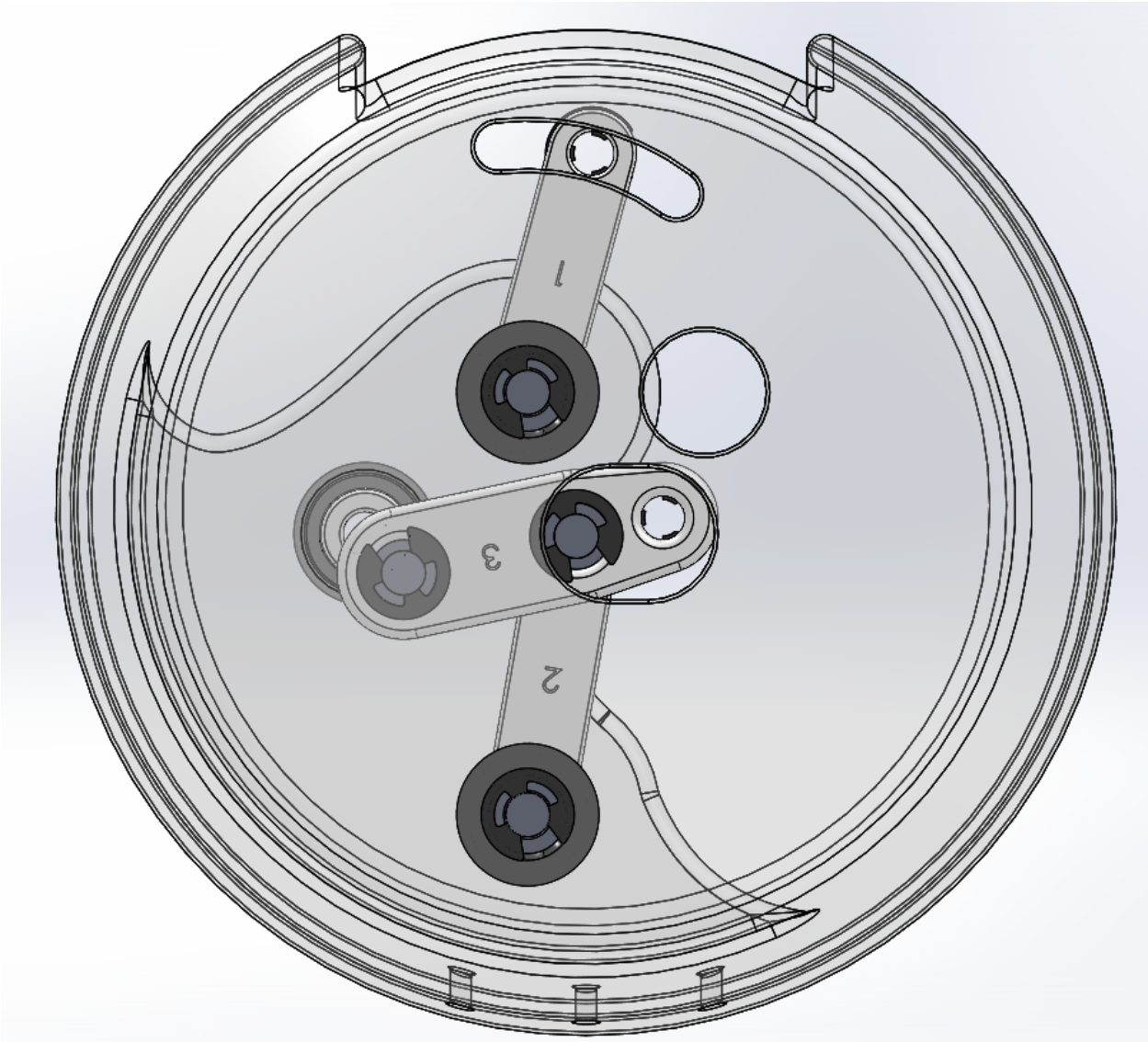

Figure 7P, Locations of Linkages in Pelvis.

The shafts that attach to the leg (JimmyQC_3008_External_Shaft) can now be attached to linkages 1 and 3 through the face of the hip as shown in Figure 8P. Fix them in place with retaining rings.

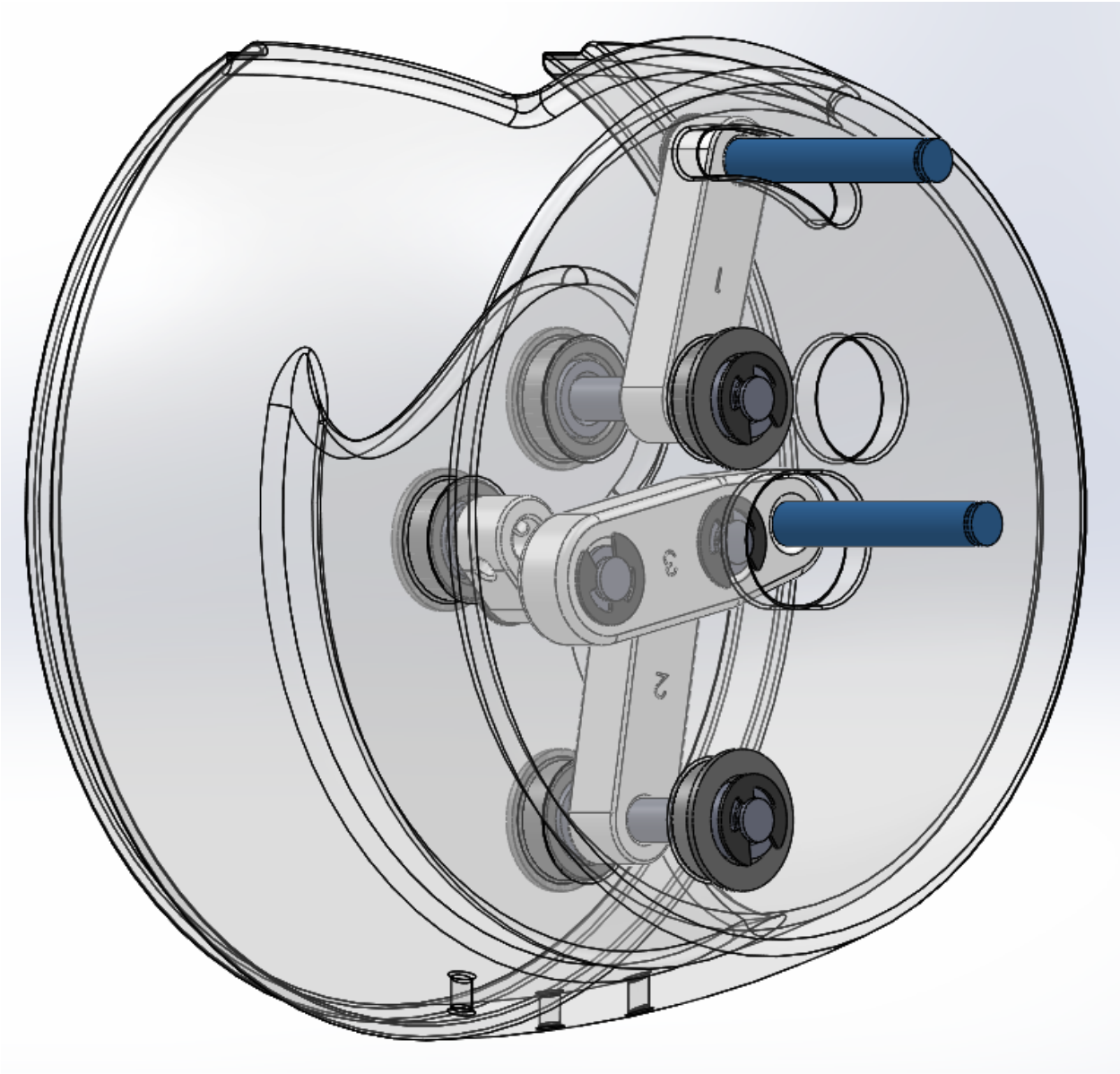

Figure 8P, External Shaft Placement.

Put these same shafts through the thigh of the leg assemblies and fit with retaining rings as shown in Figure 9P.

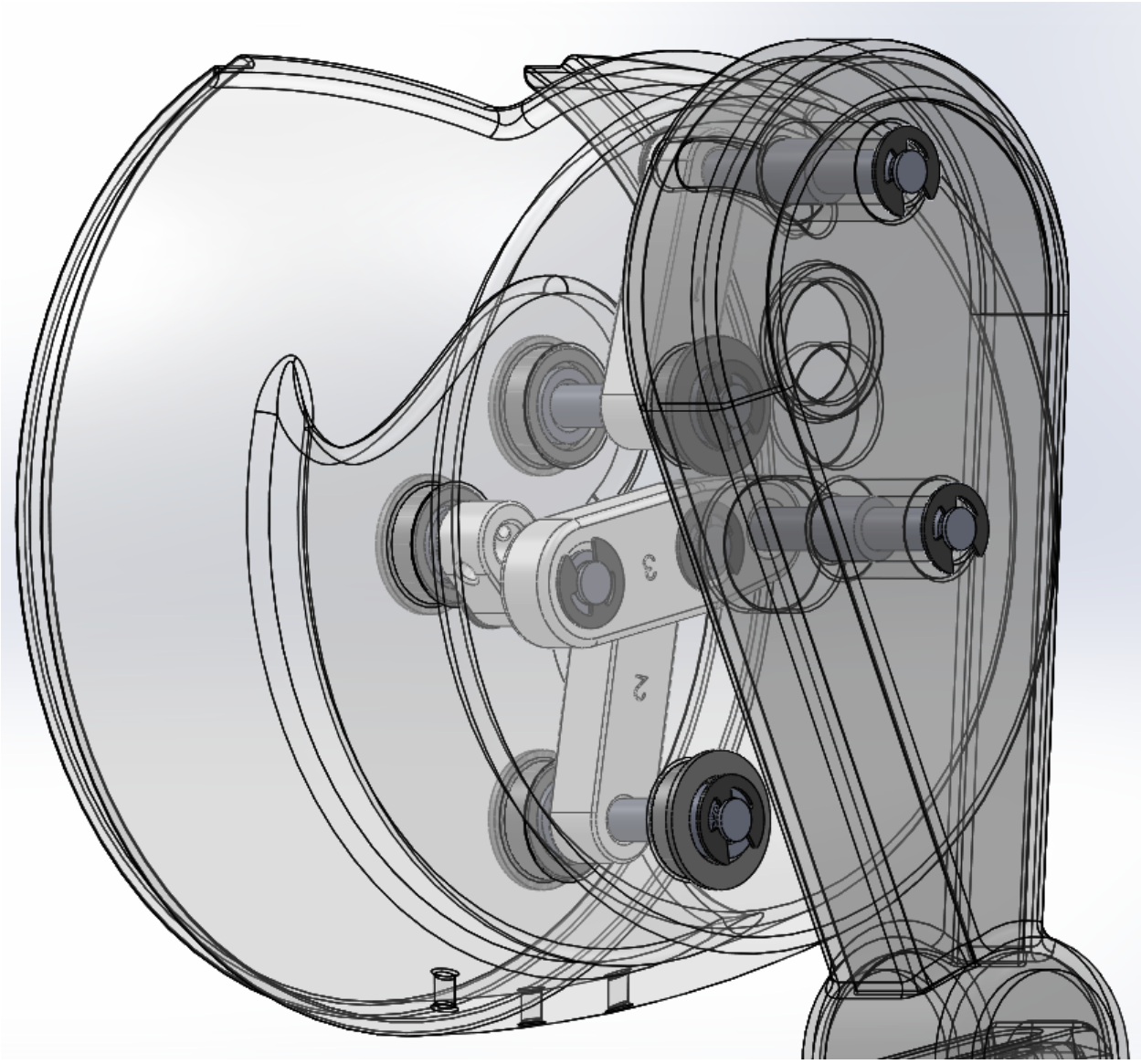

Figure 9P, Placement of Leg.

Take the left half of the pelvis and insert the drive shaft and pulley assembly as shown in Figure 10P. Lock in place with a pin through linkage 4. Put your belts around the drive shaft.

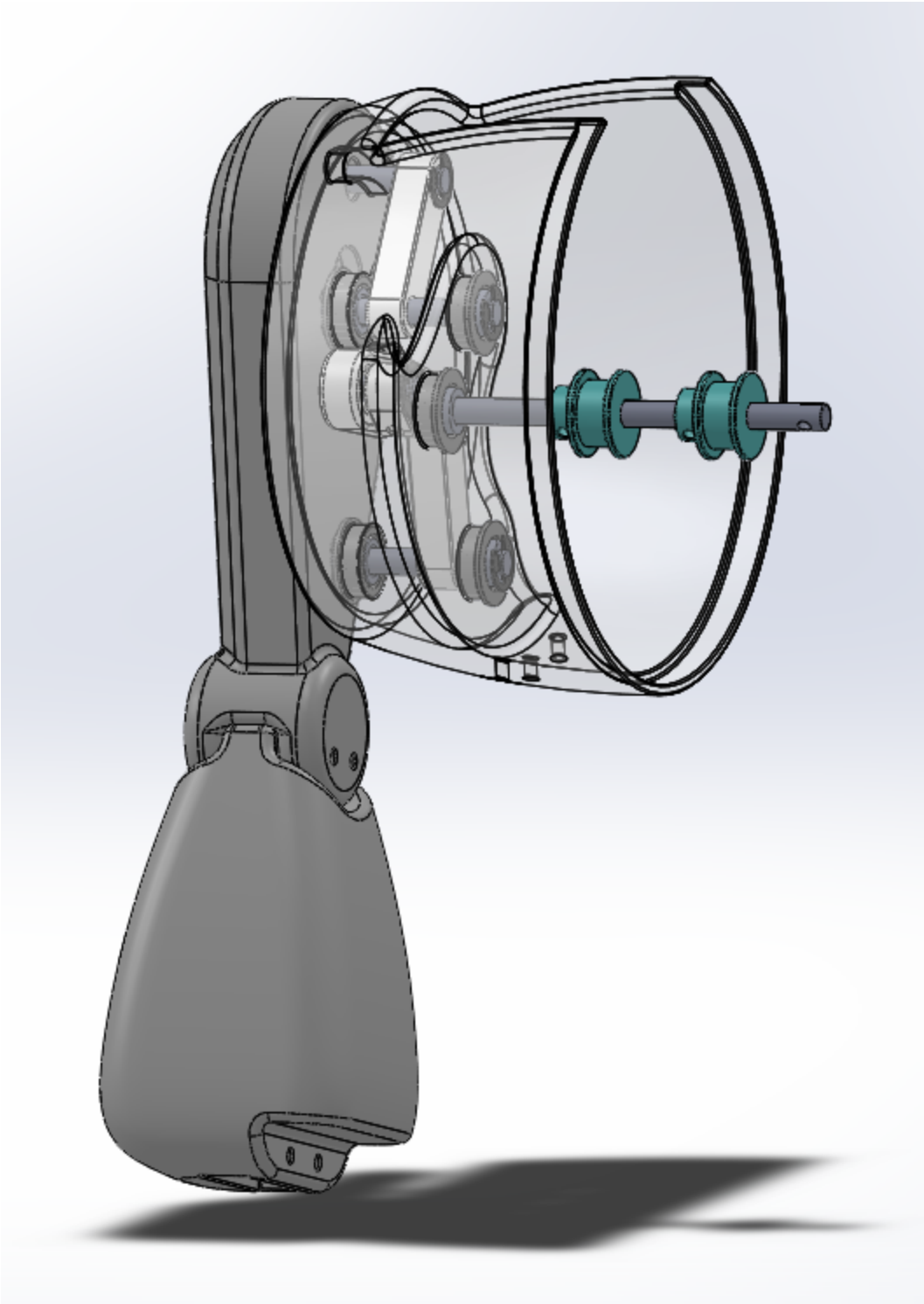

Figure 10P, Placement of Drive Shaft.

Screw the motor in place on this half as shown in Figure 11P, and then fit the belt between the motor and the drive shaft.

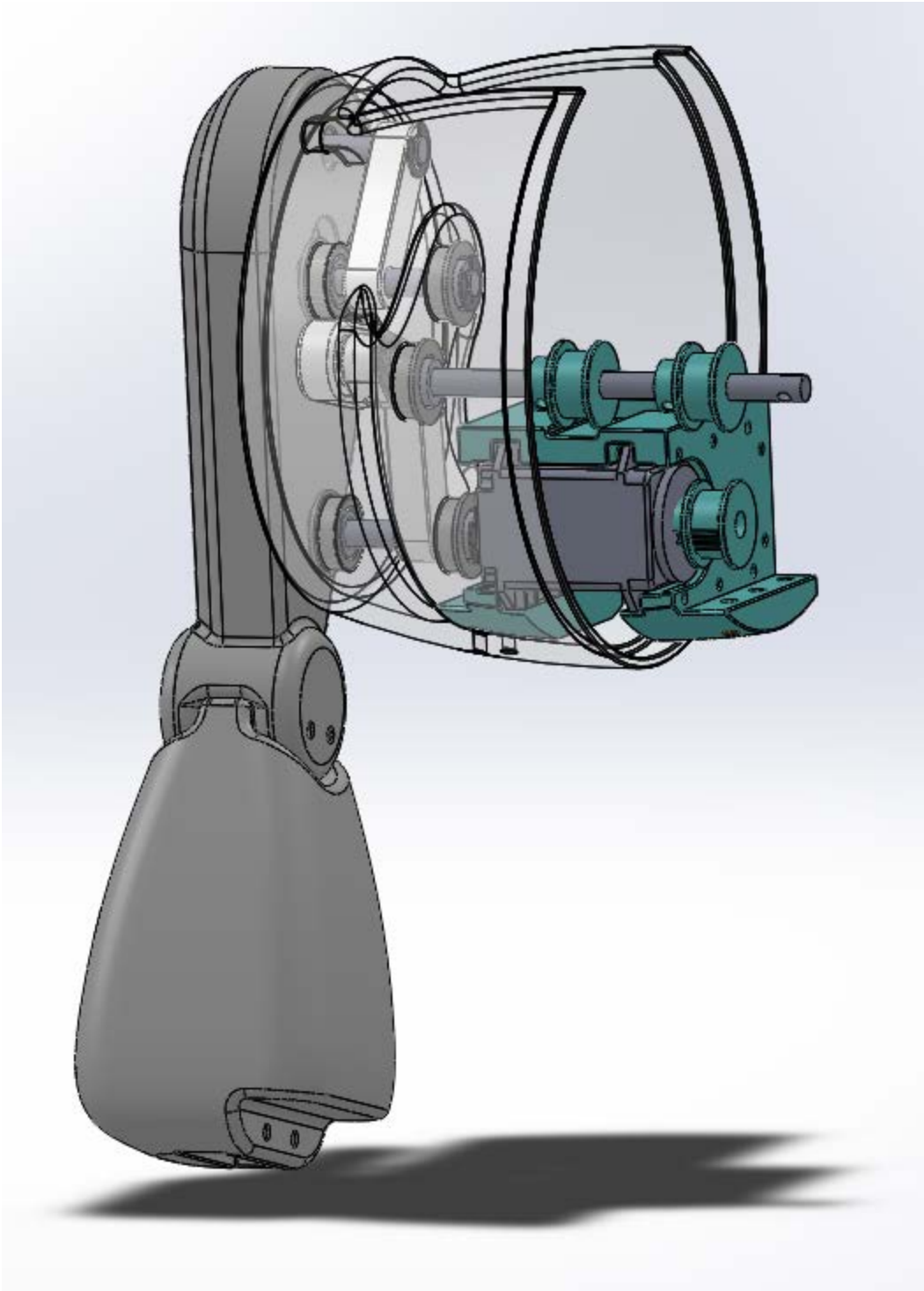

Figure 11P, Placement of Motor Assembly.

You are now ready to fit the two halves together. Fit them such that the drive shaft goes into the appropriate hole and the opening on the top lines up accurately as shown in Figure 12P. Pop the second drive shaft retaining ring into place.

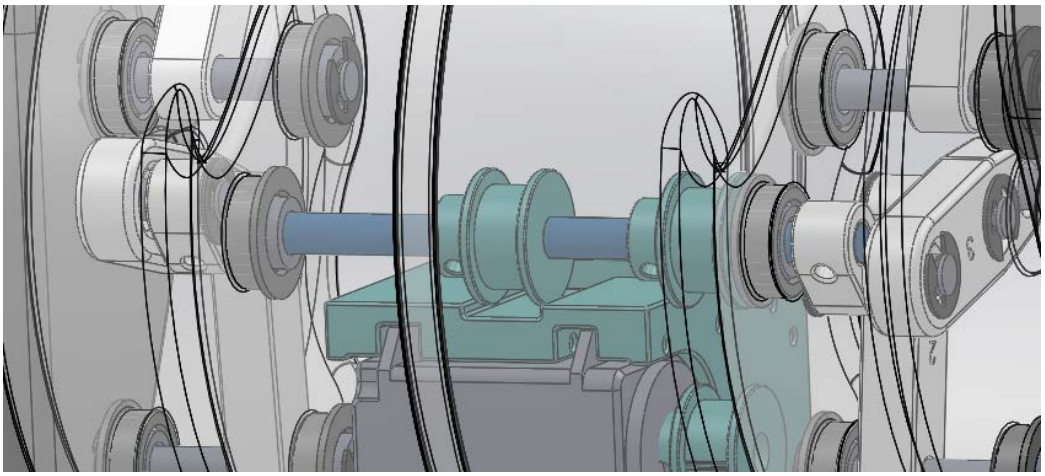

Figure 12P, Placement of Drive Shaft when connected to both sides of Pelvis.

To fully fix the motor as well as to keep the two halves of the pelvis together, screw in the other half of the motor mounting screws.

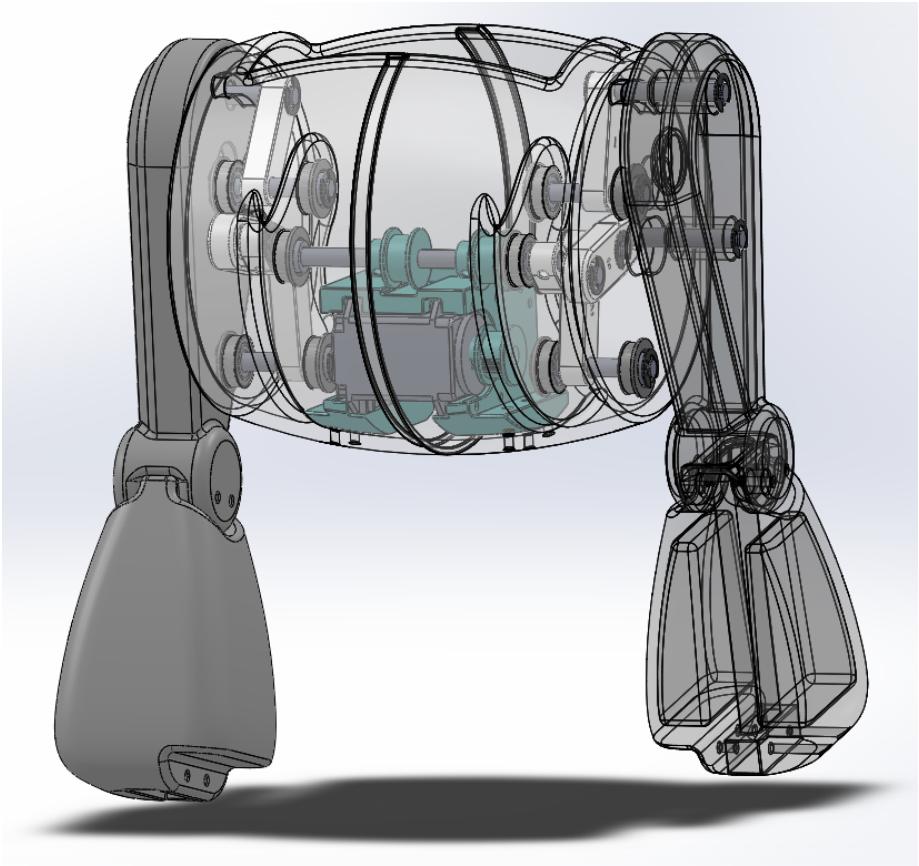

Figure 13P, The Full Pelvis Assembly.

The legs and feet are connected with 1/8”diameter spring pins through the mortise and tenon joint at the bottom of the shin and top of the foot.

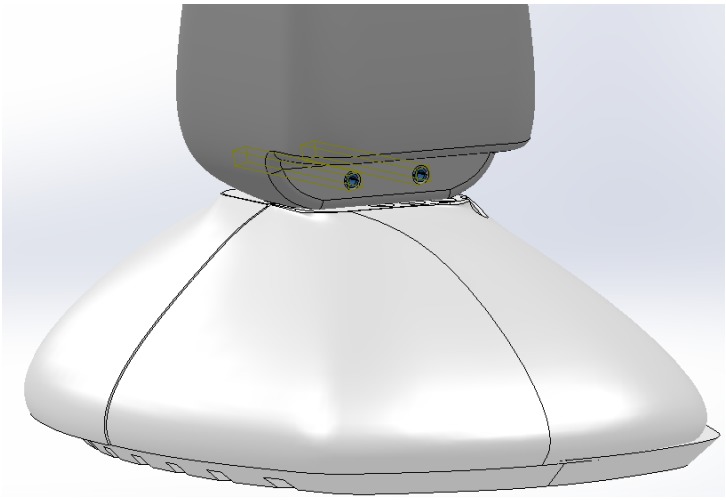

Arm Assembly (Brendan Quinlivan)

The next assemblies to be built are the two arms. Prior to assembly, the holes for the ¼" shaft must be drilled out for four pieces including both *Bicep Anterior* and *Bicep Posterior(both Part #4001), Motor Gear (Part #4002),* and *Forearm and Hand (Part #4005).*

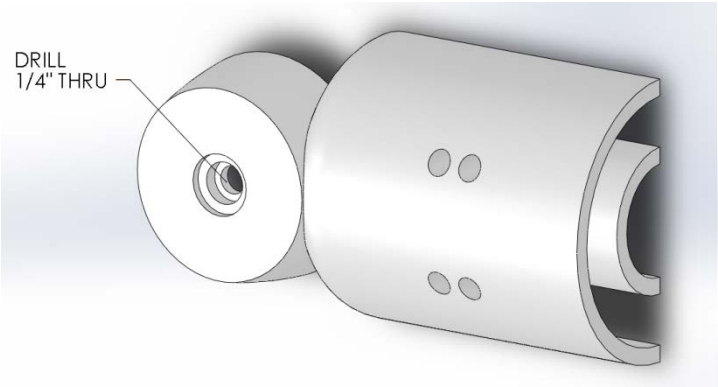

(a) Part #4001 Bicep—Posterior

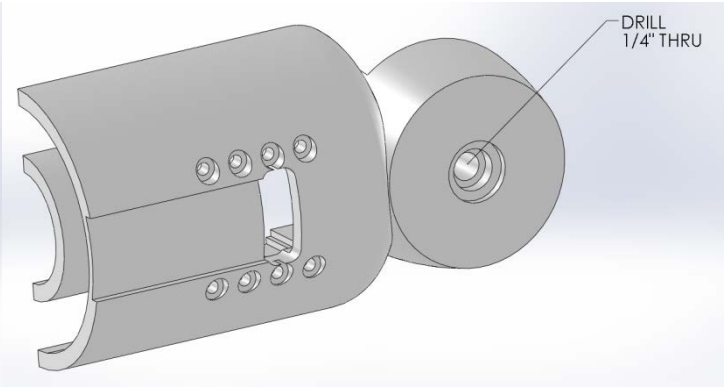

(b) *Part #4001 Bicep—Anterior*

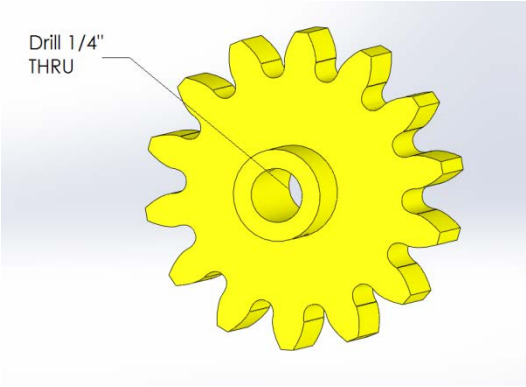

(c) *Part #4002 Motor Gear*

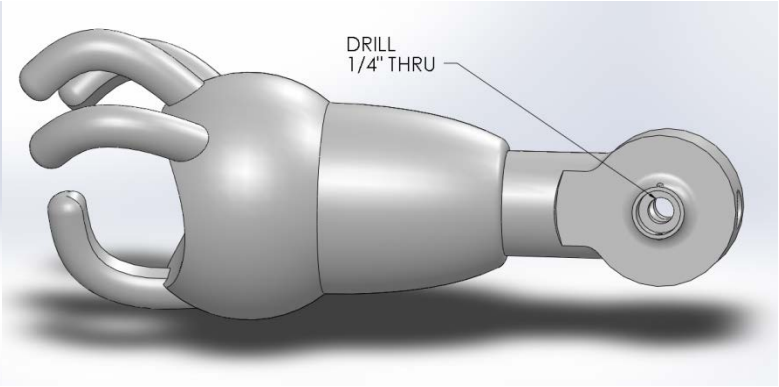

(d) *Part #4005 Forearm and Hand*

Next press fit the ¼" ball bearings into both the anterior and posterior bicep, *Bicep Anterior and Posterior (both Part # 4001).*

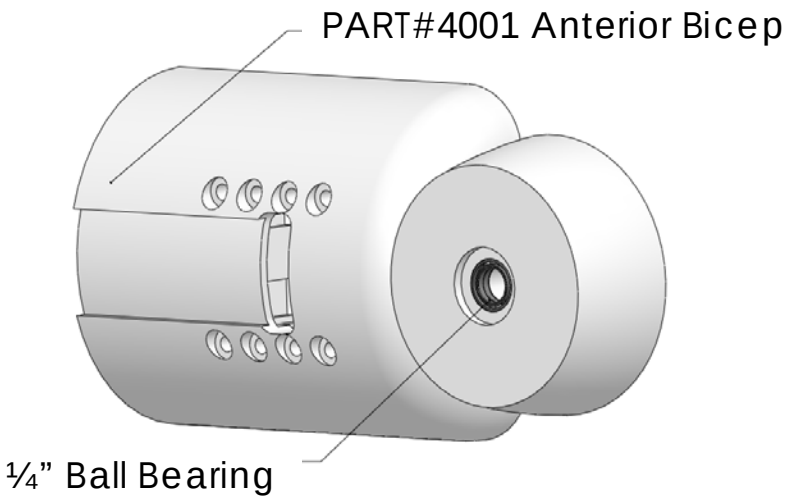

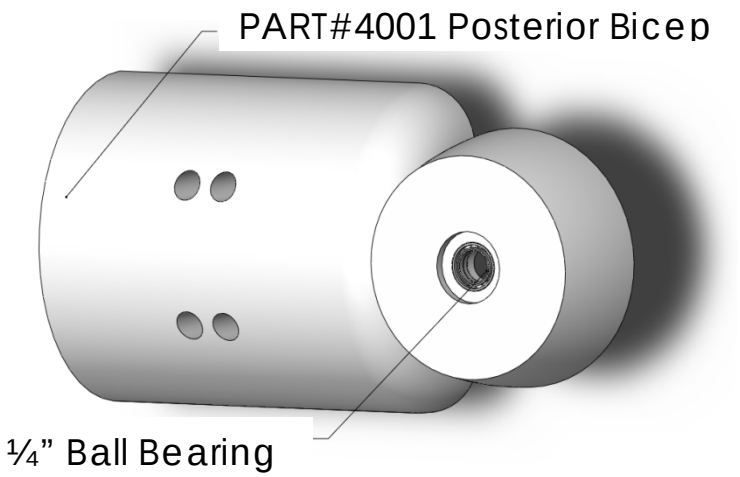

Additionally, use a soldering iron to set the 2-56 Brass Heat- Set Threaded Inserts into the holes on the *Anterior and Posterior Bicep (both Part # 4001).*

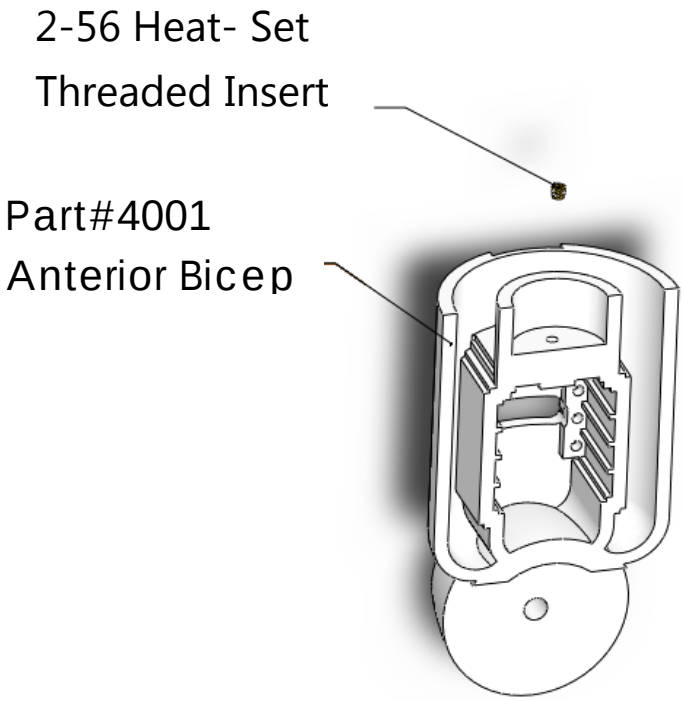

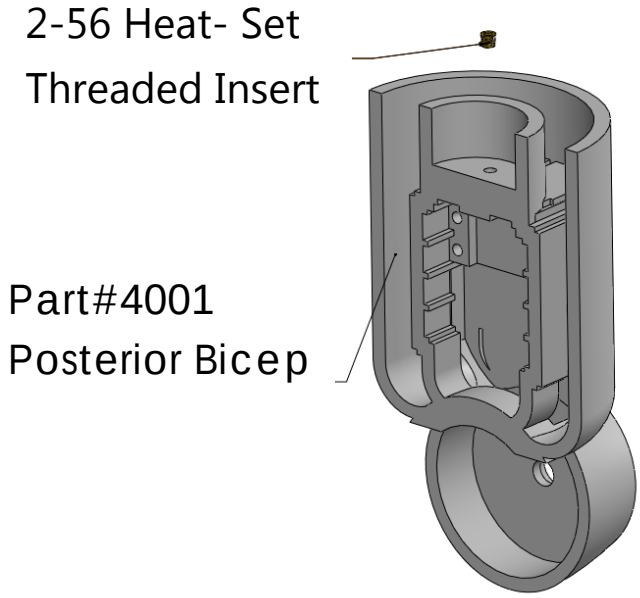

Now secure the *Motor Gear (Part # 4002)* to the *AX12 Motor Horn* using M2.5 x 6mm machine screws and M2.5 hex nuts. Additionally secure this *Motor Gear/Motor Horn* assembly to the *AX12 Motor* using the *AX12 Mounting Screws* (M3x10mm) that came packaged with the motor.

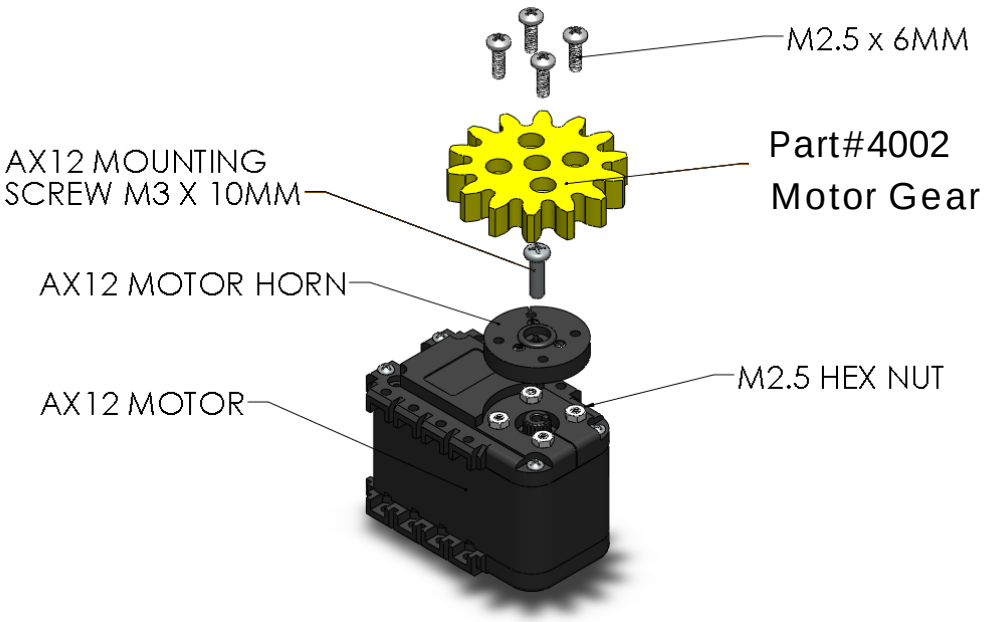

Next, secure the Forearm Gear(Part #4003) and Forearm Gear (Part #4005) onto the Elbow Pin(#4004) using the 1/16" Slotted Spring Pin as shown below.

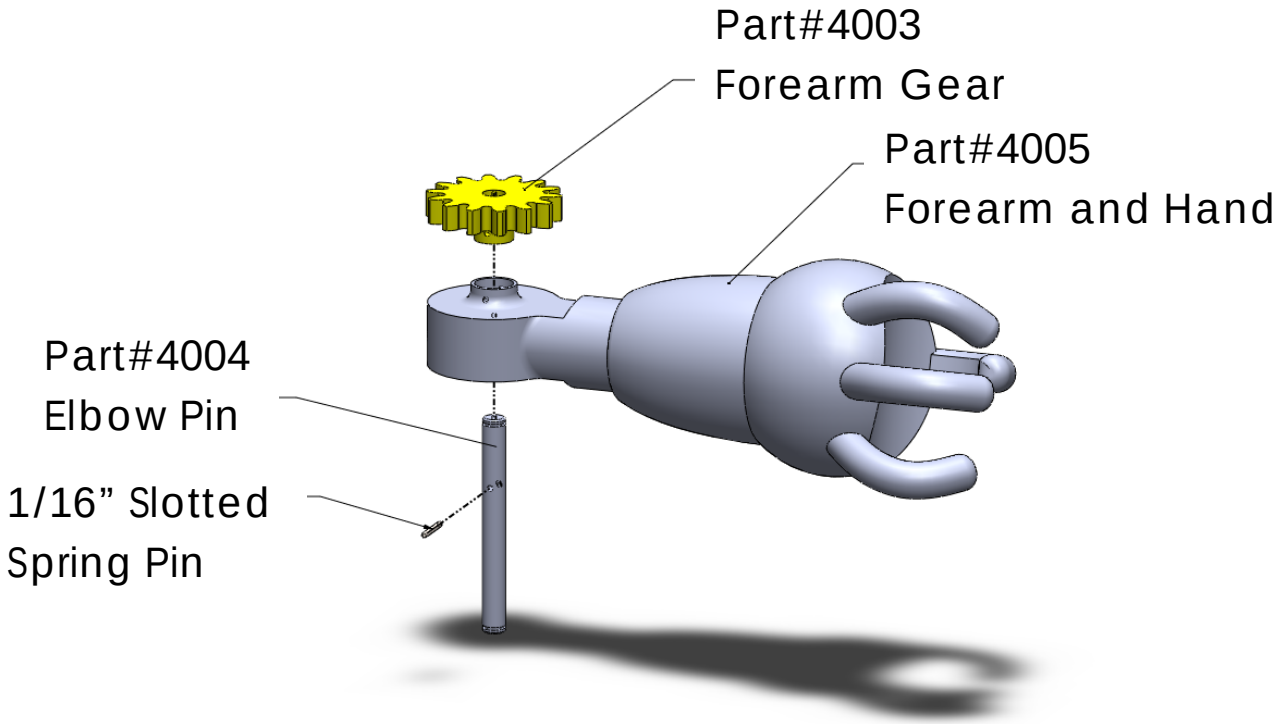

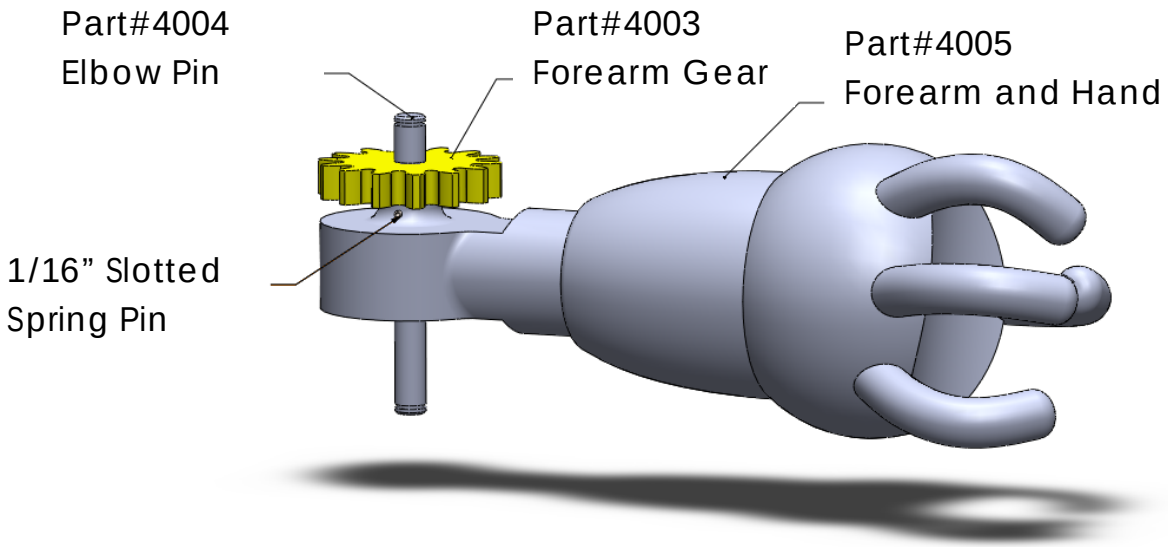

With the *Motor Gear* (*Part # 4002*) mounted to the *AX12 Motor,* the ¼” ball bearings pressed into both *Bicep Anterior* and *Bicep Posterior(both Part # 4001),* and the *Forearm Gear(Part #4003)* and *Forearm Gear (Part #4005)* mounted onto the *Elbow Pin(#4004),* you are now ready to secure the motor into the bicep. First, secure the motor into the both *Bicep Anterior (Part # 4001)* using 8 pairs of M2.5 x 6 mm machine screws and M2.5 Hex Nut.

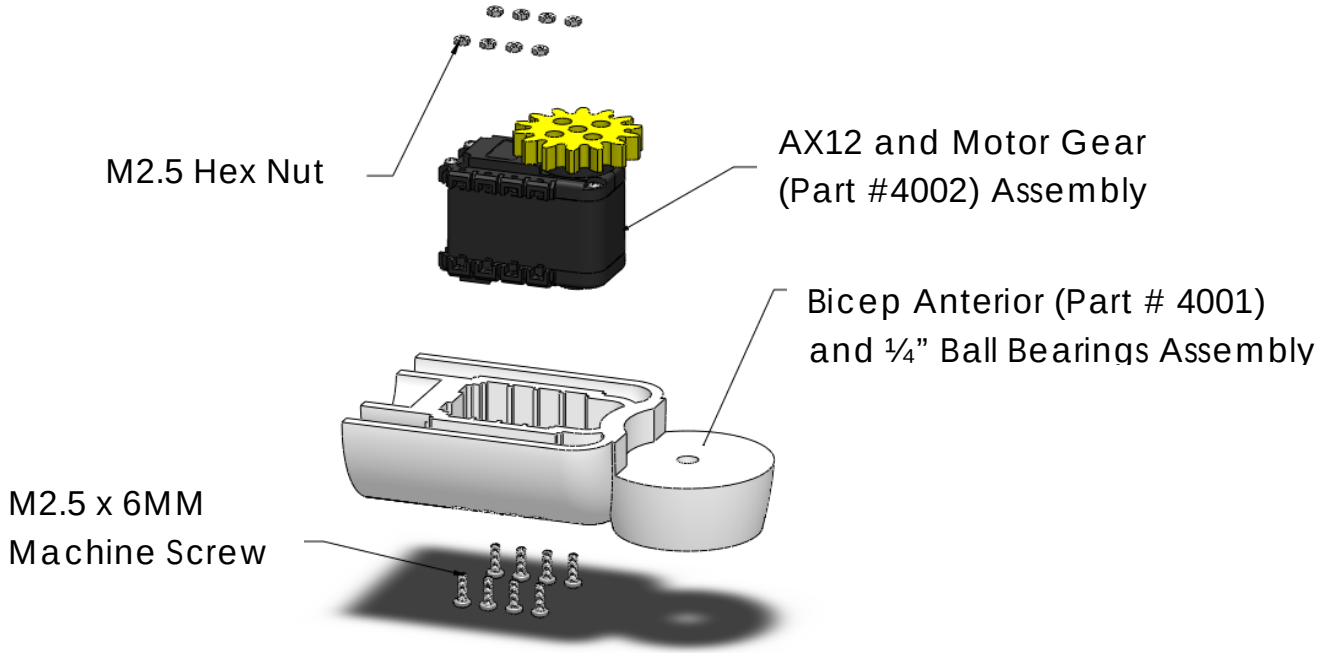

Next, slide the *Elbow Pin (Part #4004)* of the Forearm and Hand Assembly into the *Anterior Bicep (Part #4001)* as shown below.

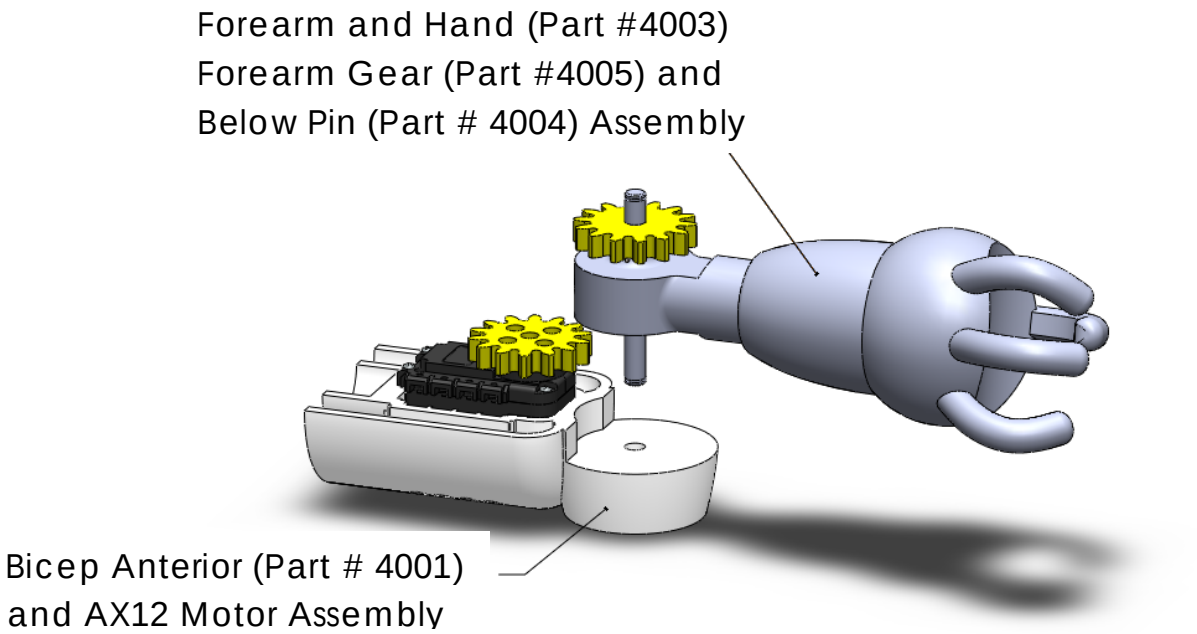

Now secure the *Posterior Bicep (Part #4001)* to the *Anterior Bicep (Part # 4001)* using 4 M2.5 x 6 mm and M2.5 Hex Nuts.

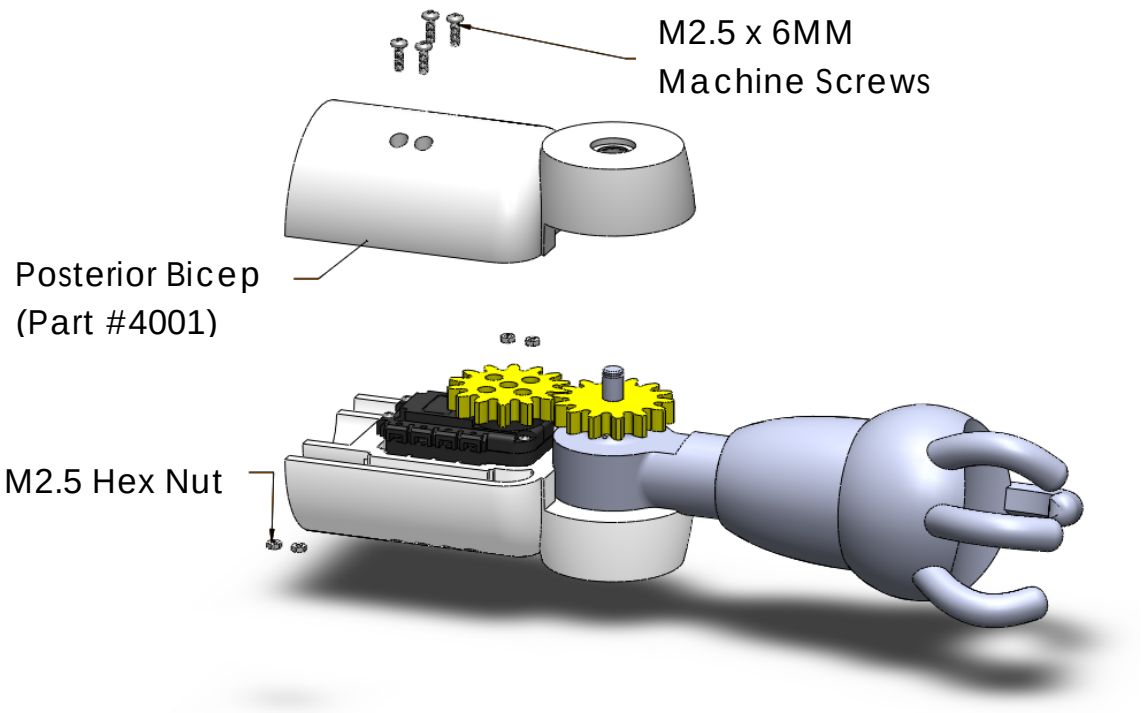

Add the ¼" retaining ring on both ends of the *Elbow Pin (Part #4004).*

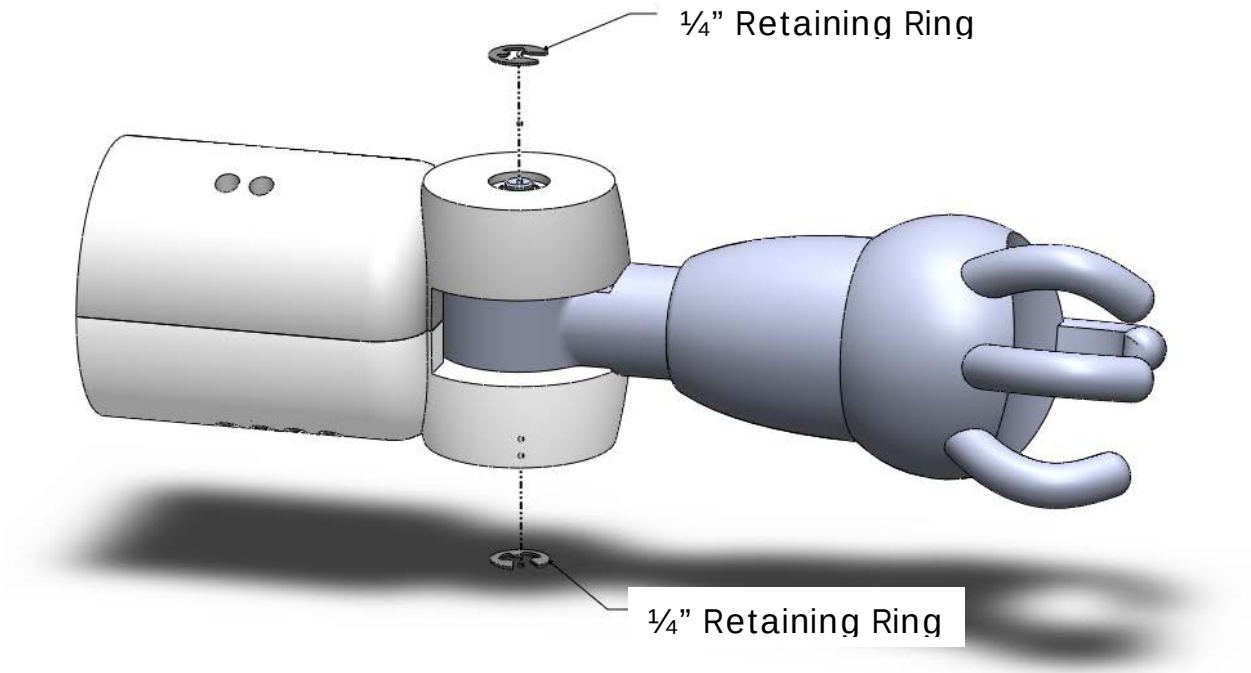

Finally, mount the *Shoulder Gimble (Part #4006)* to both *Anterior and Posterior Biceps (Part # 4001)* by screwing the 2-56, 3/16" long machine screws into the 2-56 threaded inserts you previously press fit into the biceps.

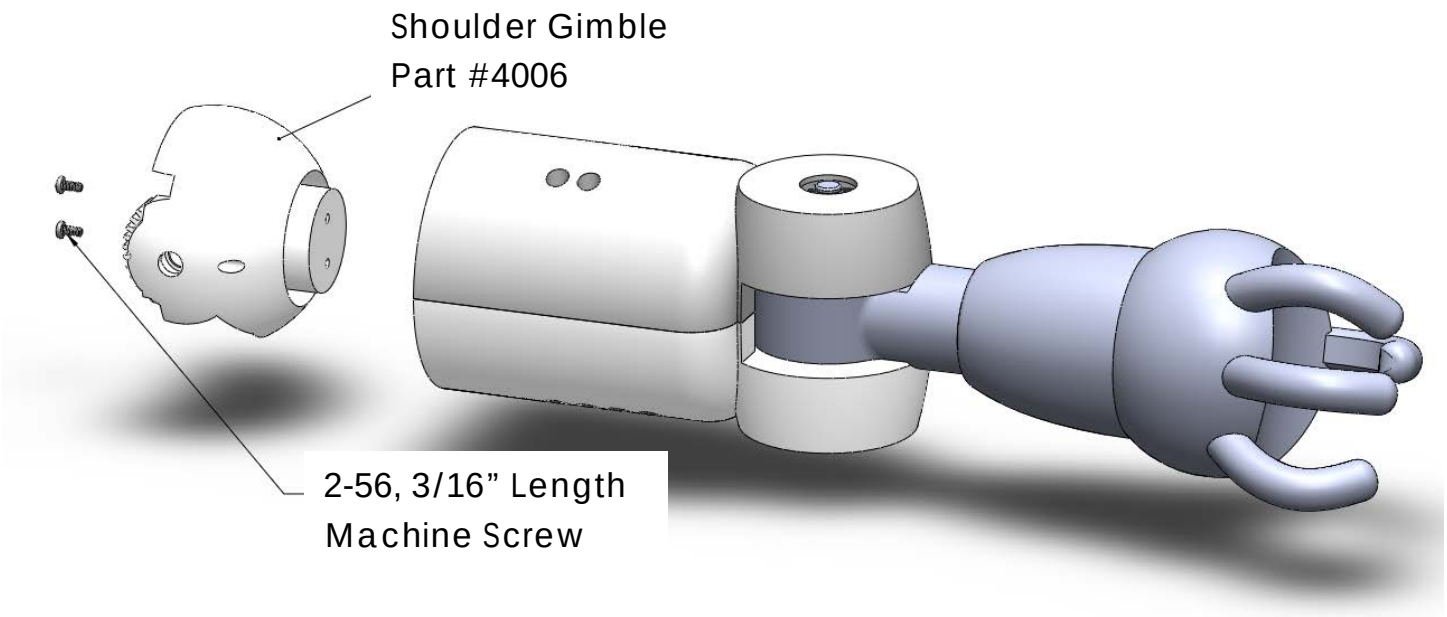

Shoulder Assembly (Brett Rowley)

To assemble the shoulder systems, begin by inserting two ¼” ID bushings (#9023) into the torso as shown below.

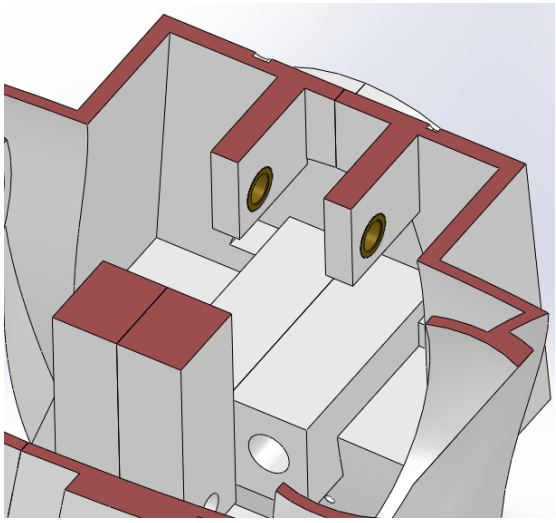

Next, press-fit the central rotation shaft (#5002) through the middle of the torso.

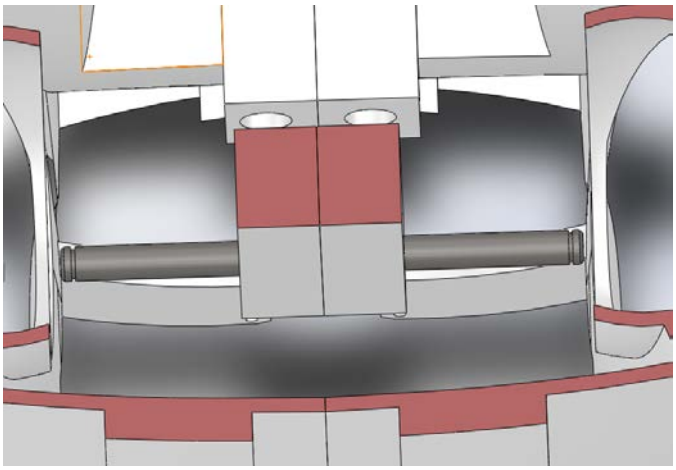

Place the belt over the shoulder pulley (#4012) and hold it between the two mounting tabs as you insert shaft #5006. Note that the pulley hub should be on Jimmy QC's left-hand side and that there is a corresponding hole in the shaft. Use #9237A178 to pin the pulley to the shaft. Also note that a washer (#9022) rests either side of the pulley on the shaft.

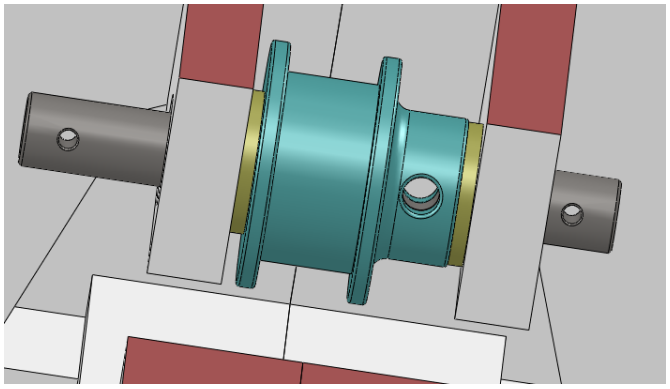

Take short linkage (#5008) and fit linkage-linkage shaft (#5005) through the smaller of the two holes (3/16"). Place a retaining ring (#9026) on the shaft as shown. Repeat this for the other set of parts.

Place the completed short-linkage subassemblies on either end of the pulley shaft and pin in place with 1/16” spring pins (#9024). Note that the short linkages should point in opposite directions, e.g. one away from the ground and one towards the ground.”

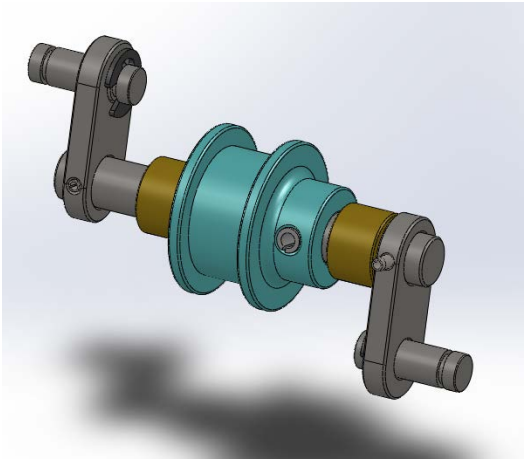

Place two washers (#9022) over each of the linkage-linkage shafts.

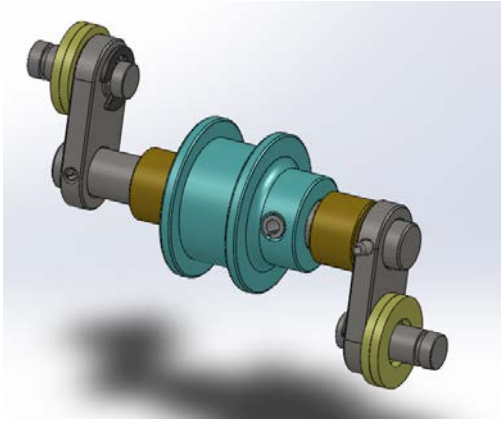

Take long linkage (#5007) and press fit two 3/16” ID ball bearings (#9025) into each hole.

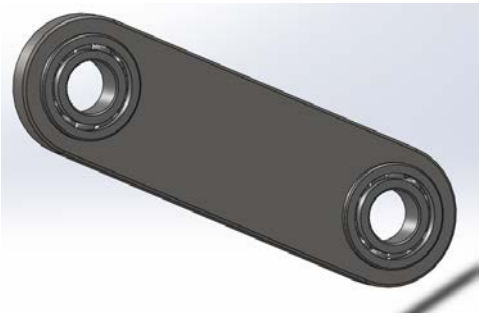

Place the completed long linkages over the linkage-linkage shaft (orientation does not matter) and place a retaining ring (#9026) at the end of the shaft.

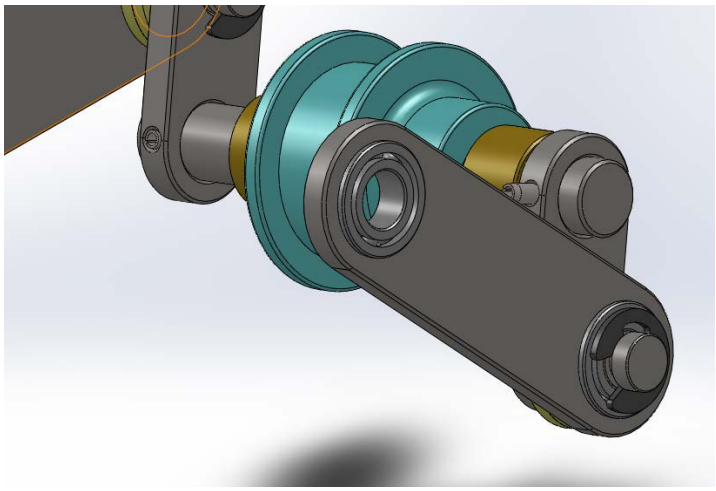

This concludes the assembly of the shoulder pulley linkage system. Next we will assemble the shoulders and attach them to the arms. To begin with, press-fit four ¼" ID bushings (#4003) into the holes of the motor mount (#5001) indicated below. Ensure ends are flush.

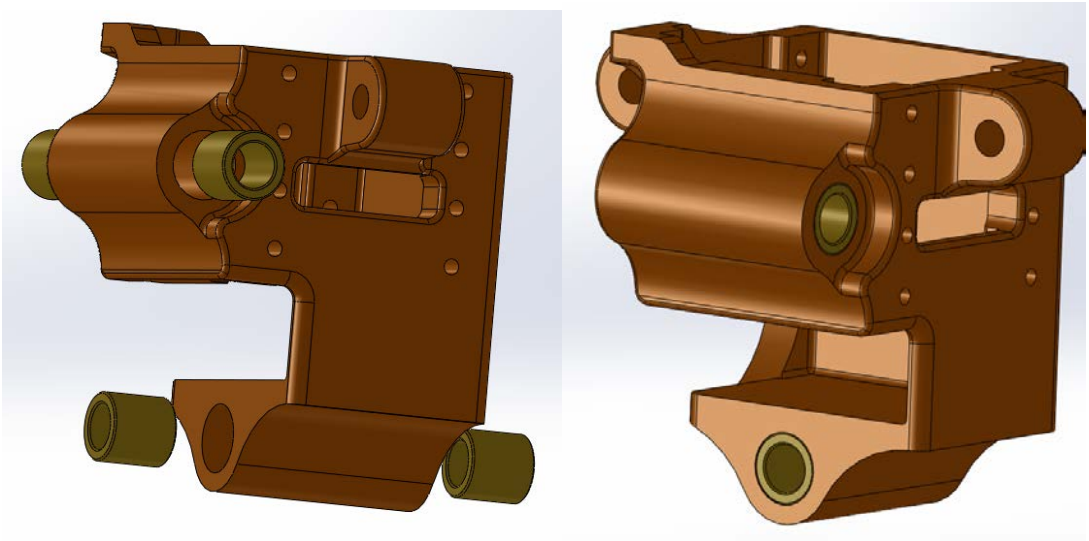

Press fit the shoulder linkage shaft (#5004) into the indicated holes. Note that there are symmetric mounts on each block, but that the shafts should be on opposite sides for the left and ride shoulders.

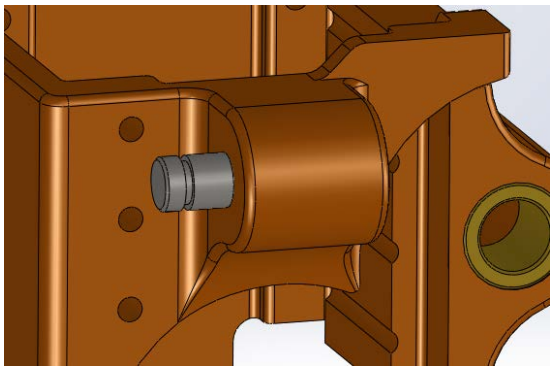

Ensure that the AX-12 motor has M2.5 nuts (#9005) inside the indicated recesses on the motor.

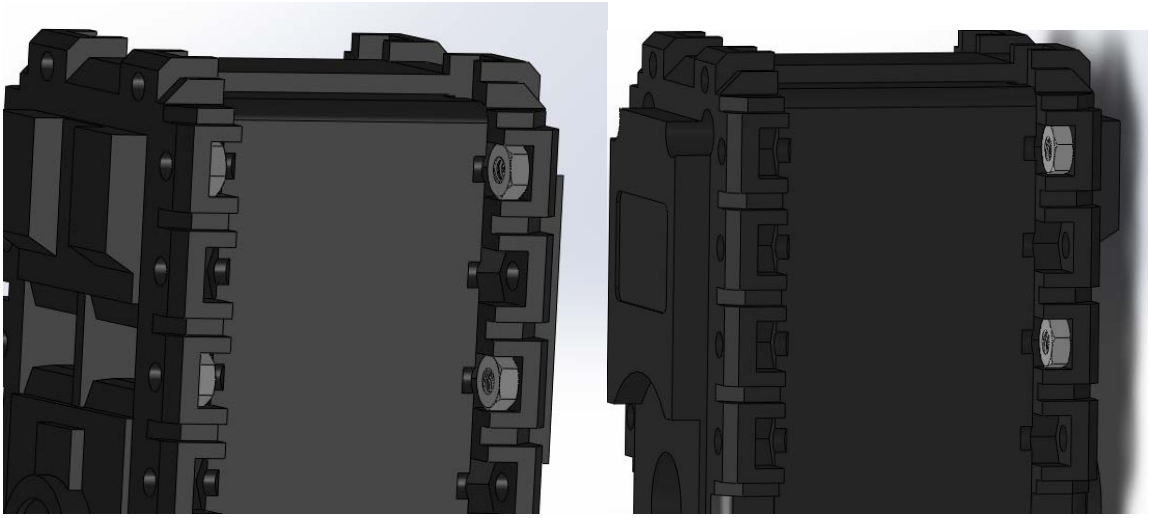

Drop the motor into the motor mount and attach with six M2.5x10 screws (#9012) as shown. Note the orientation of the motor.

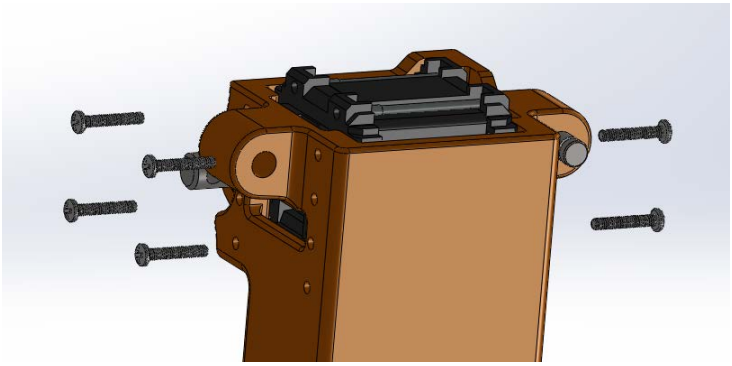

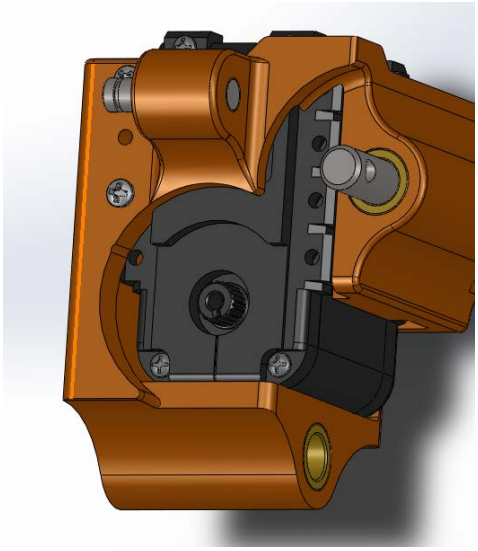

Place the shoulder gear (#5009) onto the motor spline adapter and screw tight with #8106.

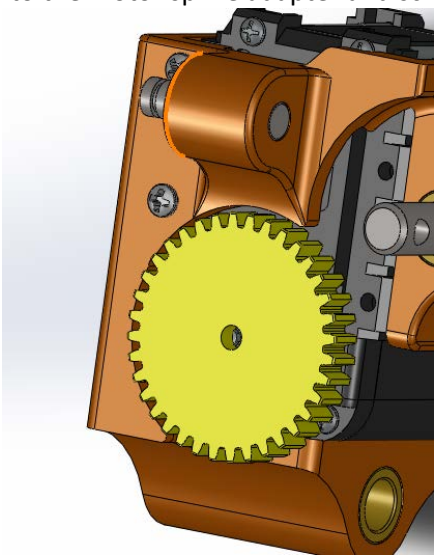

Next, we will be attaching the shoulder to the arm assembly. Place the shoulder gimbal (#4006) over the motor assembly and insert shoulder-arm shaft (#5003) through the motor mount and gimbal holes.

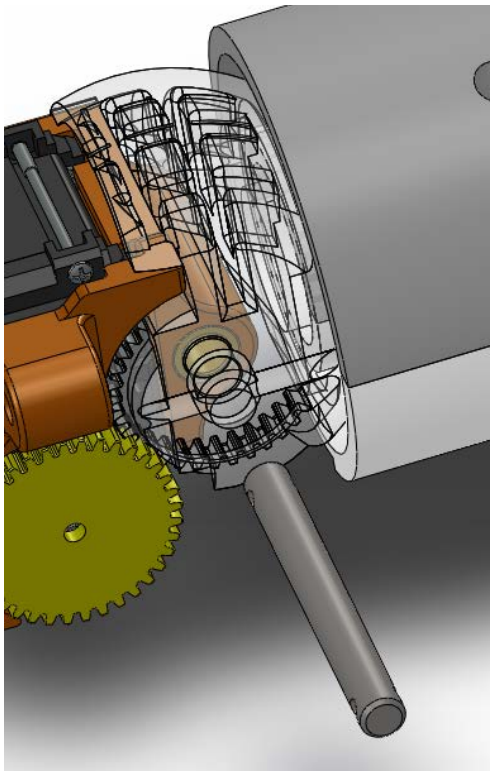

Once the shaft is through, rotate the arm to its lowest possible angle in order to expose two holes for placing pins #9237A178 through the shaft with pliers.

Take the entire shoulder-arm subassembly and place it over the end of the rotation shaft (#5002). This is currently not physically possible due to the state of the torso, but future work would include an access hatch or vanity panel.

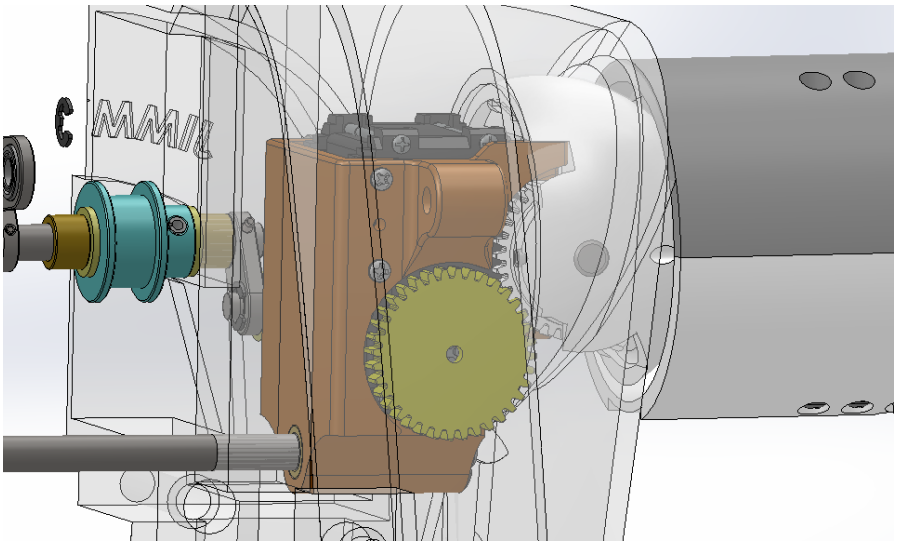

When inserting the shoulder-arm subassembly, make sure the shoulder-linkage shaft (#5004) inserts into the long linkage (#5007). Place a retaining ring on the shoulder-linkage shaft when complete.

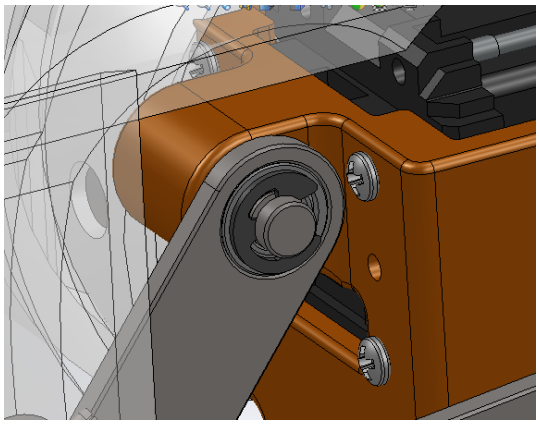

Place a retaining ring (#9014) on the end of the shaft to constrain the shoulder motor mount.

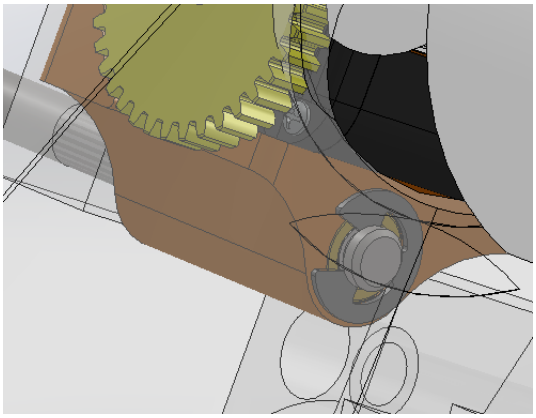

Repeat all of the above steps for the other set of shoulder and arm parts.

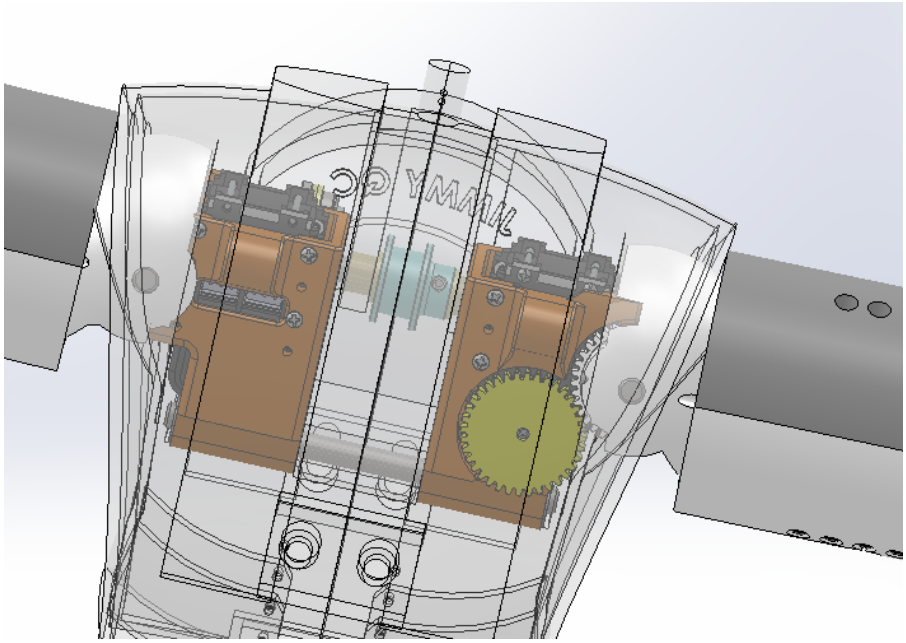

Torso/COM-Shifting Assembly Instructions (Christina Fong)

1. Press fit sleeve bearings (teal) into indicated holes in JimmyQC_7006L_Torso. Repeat on JimmyQC_7006R_Torso.

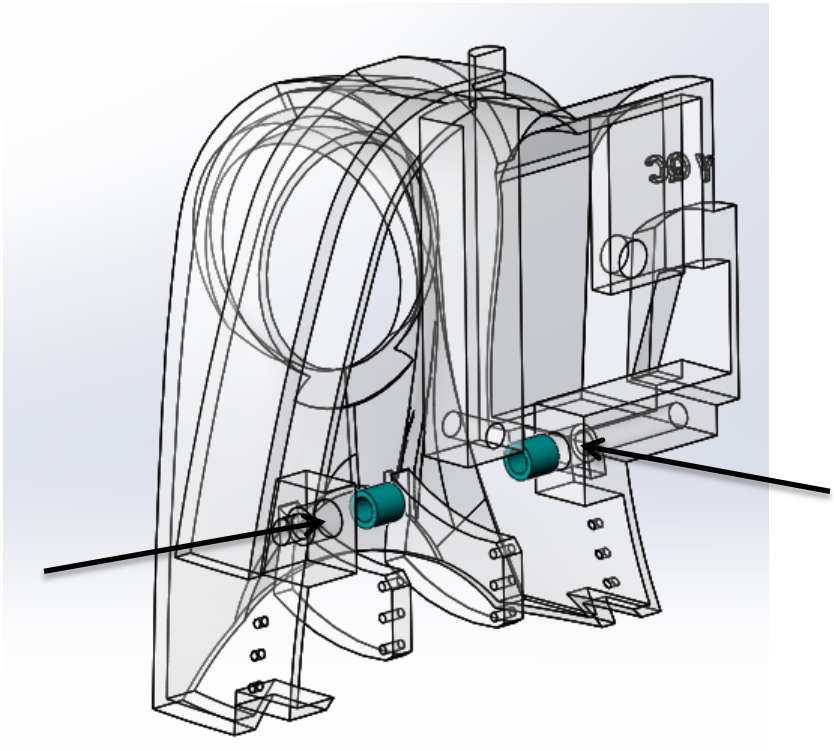

2. Assemble the motor (as seen in head assembly instructions)
3. Using the M2 screws that come with the motor, attach the ShortGearMount (purple) to the motor horn (light grey).

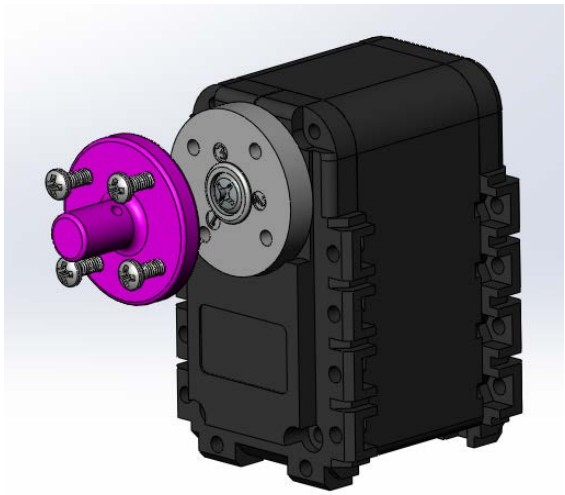

4. Attach the SmallGear (light blue) to the ShortGearMount with a 1/16" OD spring pin (red)

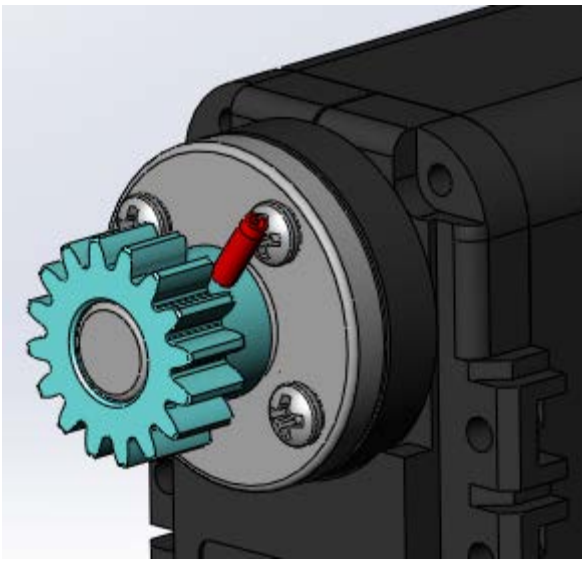

5. Fasten motor to front and back mounts of JimmyQC_7006R_Torso with 6 of the long M2.5 screws, and fasten with M2.5 bolts. Note: You may need to use a long screwdriver through the front and back holes in the shell to screw the motor in securely.

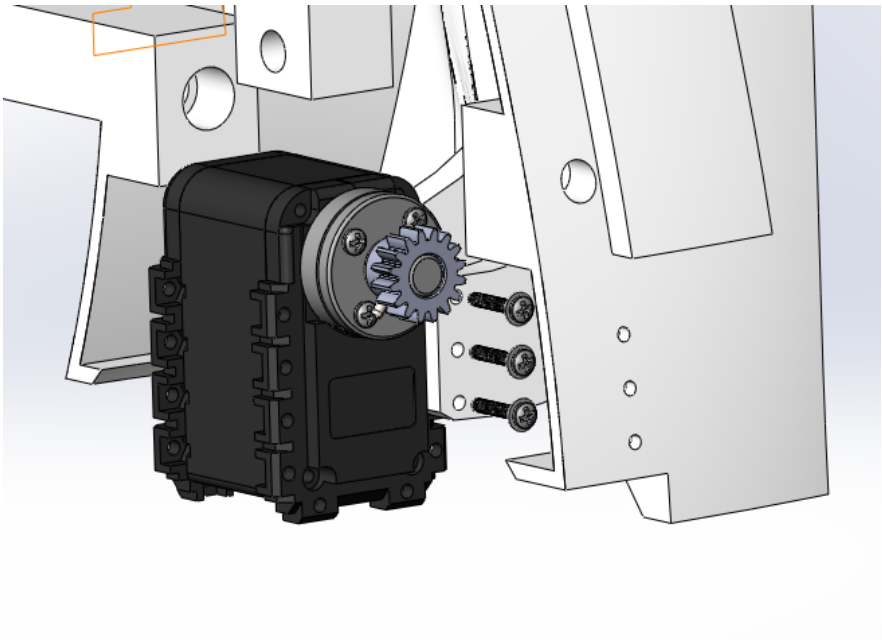

6. Slide the DriveShaft partway into the JimmyQC_7006R_Torso. Thread on in the following order: spacer, short link, spacer, driving link (green), large gear (orange), long link, spacer, short link, spacer. Slide driving shaft all the way through. Move large gear and driving link to above pin holes, and fasten with spring pins. Move spacer, short link, spacer, long link against wall and fasten with retaining rings.

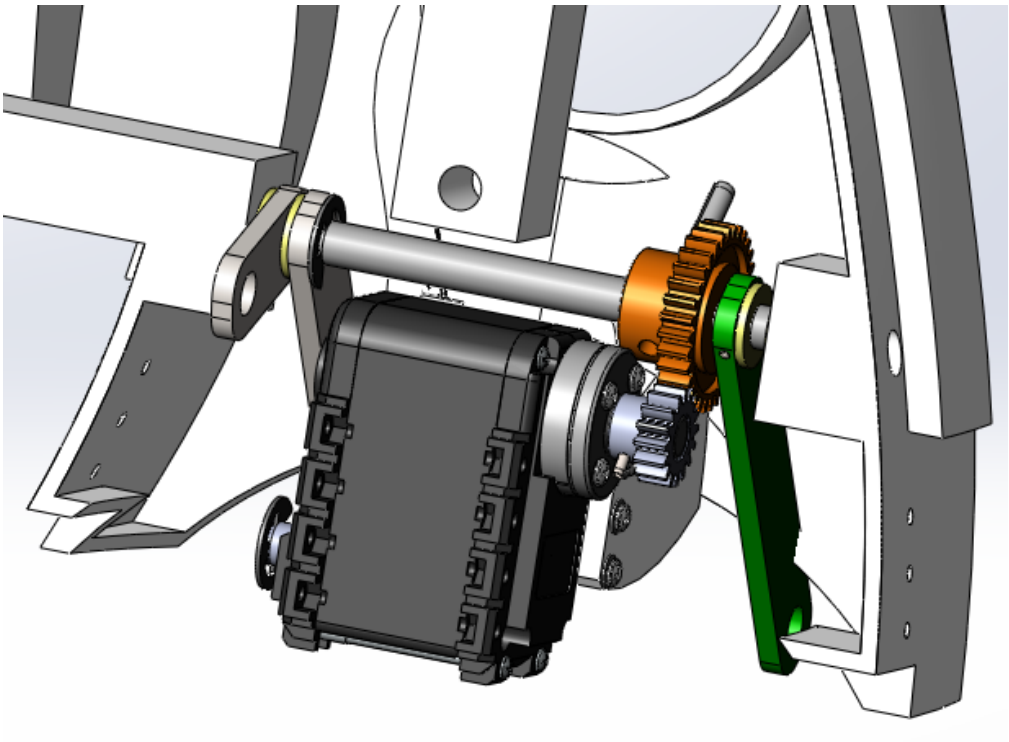

7. Slide the LongShaft partway into JimmyQC_7006L_Torso. Thread on in the following order: spacer, short link, spacer, long link, long link, spacer, short link, spacer. Slide long shaft all the way through. Move links and spacers to areas as indicated in picture below and fasten with retaining rings. Note: positioning components may be easiest when reaching in from the bottom.

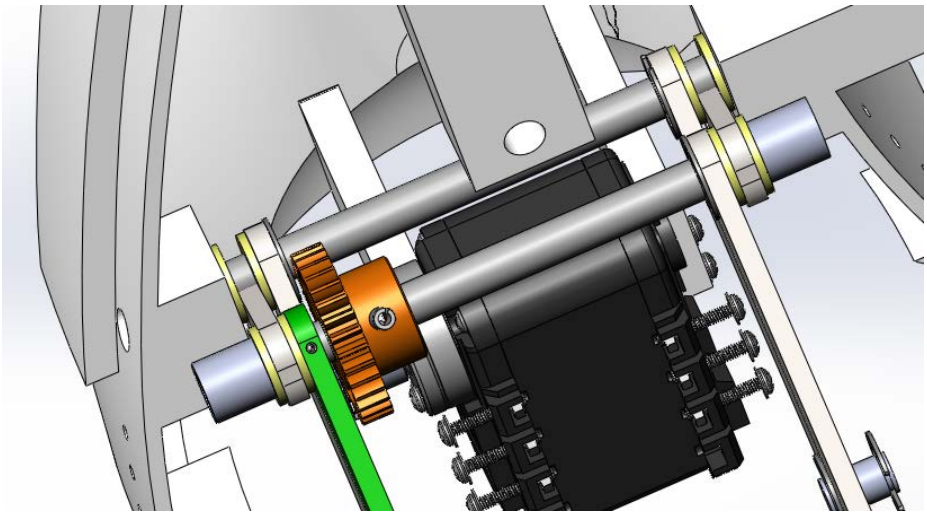

(JimmyQC_7006R_Torso is not shown in this picture for clarity, but should be directly adjacent to JimmyQC_7006L_Torso during actual assembly).

8. Fasten motor to the front and back mounts of JimmyQC_7006L_Torso in the same manner as step 5. The torso halves should now be securely combined.

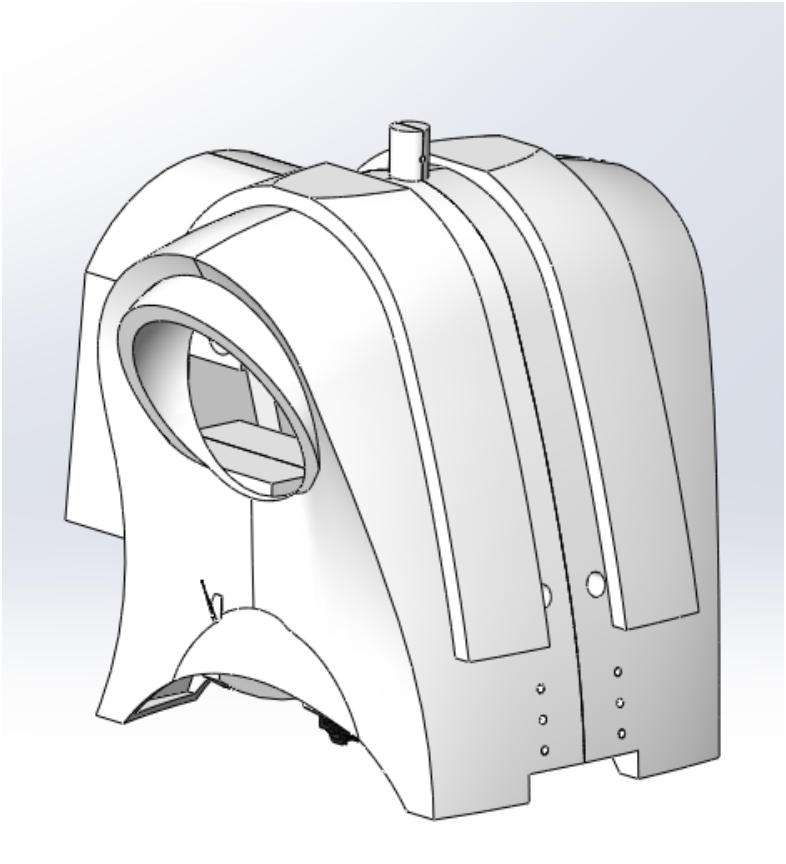

9. Slide short link shafts through bottom of long links. Fasten with retaining rings on one side.

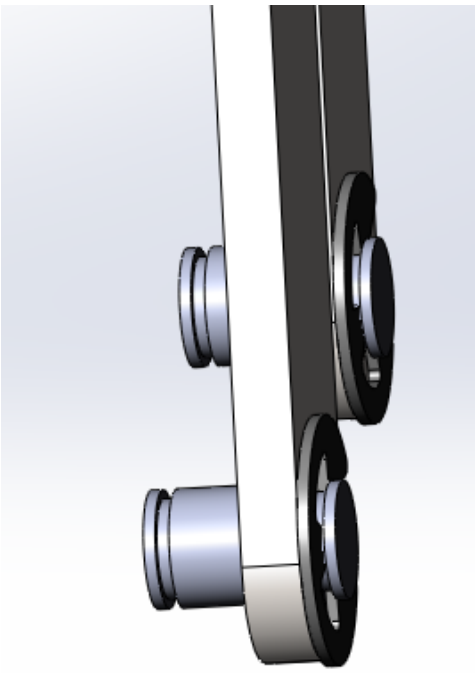

10. Attach weights to short link shafts. Fasten with another retaining ring. Note: this set of instructions assumes that a (metal) block of desired weight is used, with parallel holes drilled so

that the links remain parallel. An example is shown below. If another type of weight is chosen, two additional short links are required to hold the links parallel.

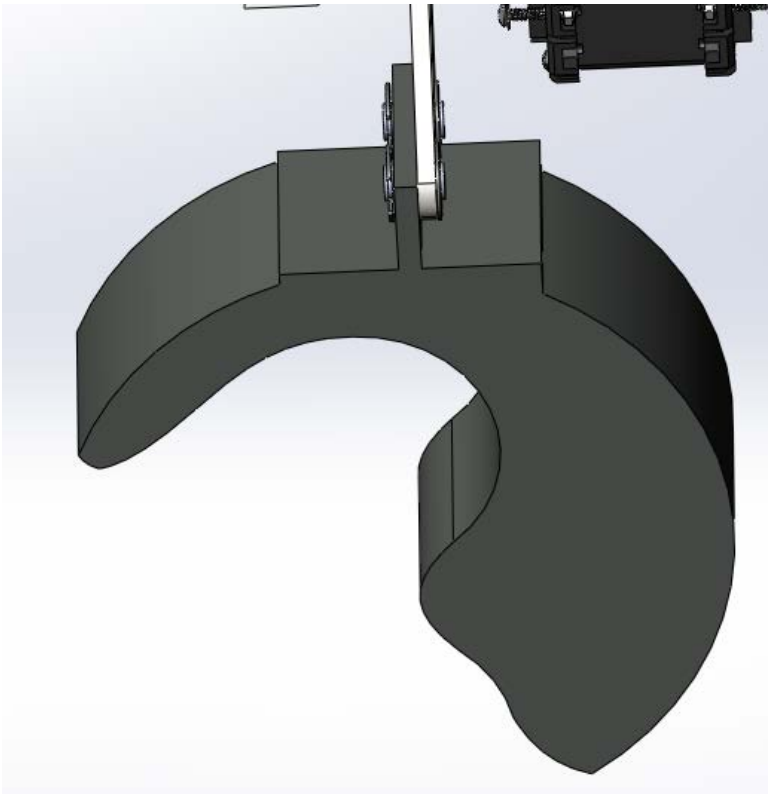

List of Parts to Print and Print Instructions

Below is a list of 3D printed parts and their volume/print orientation. All part images are shown based on how they should be printed on the try. For example. JimmyQC_6201_ChinTop should be printed as:

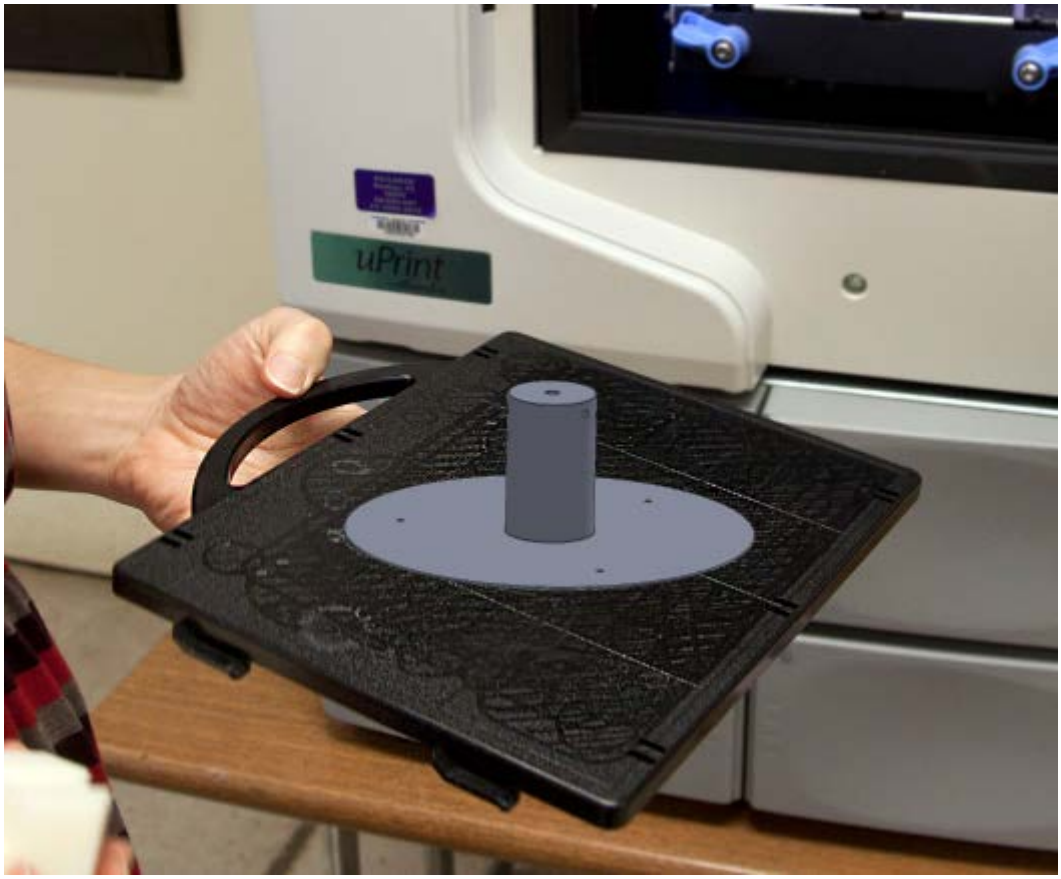

Part Number	Volume	Orientation
JimmyQC_1001_RightFootBottom	5.22	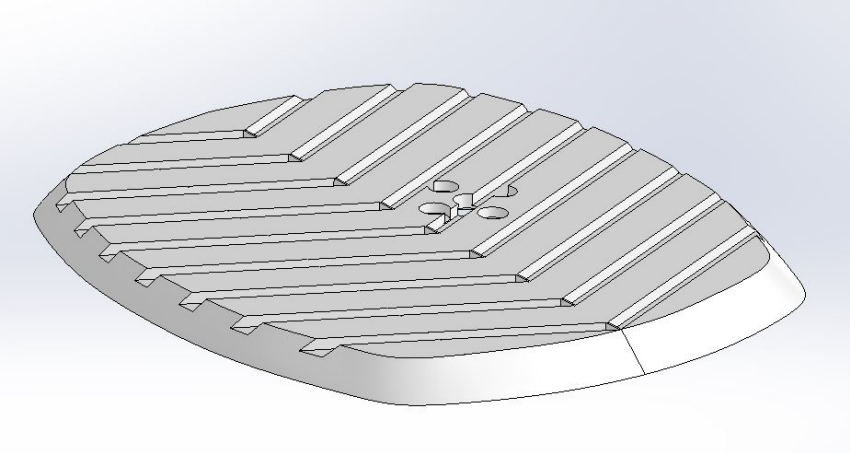 *
JimmyQC_1002_RightFoot_TopFront	13.83	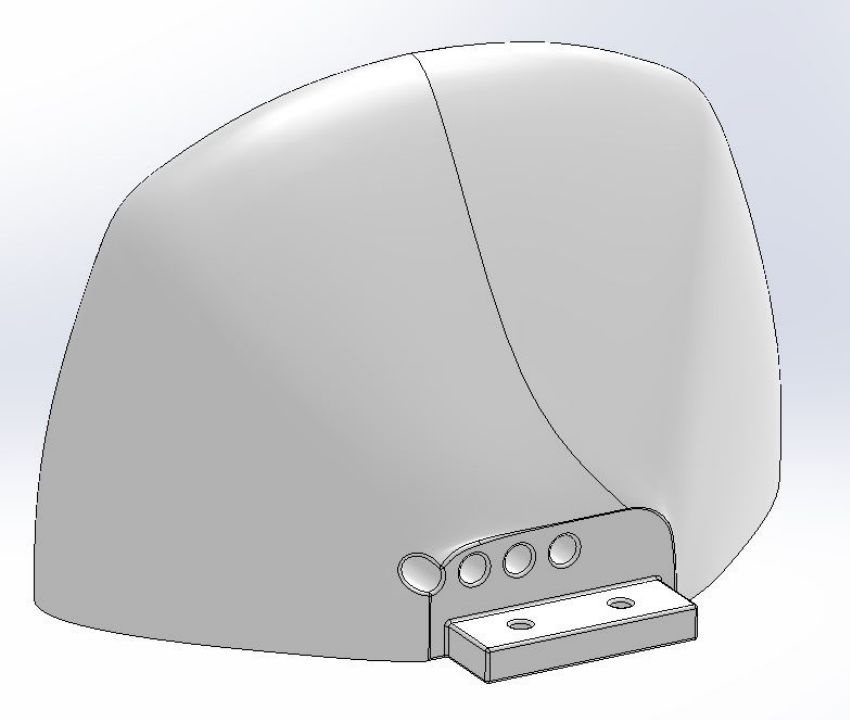 *
JimmyQC_1003_RightFoot_TopBack	14.82	Ditto
JimmyQC_1004_LeftFoot	28.65	Ditto

JimmyQC_2001_ Thigh	4.13	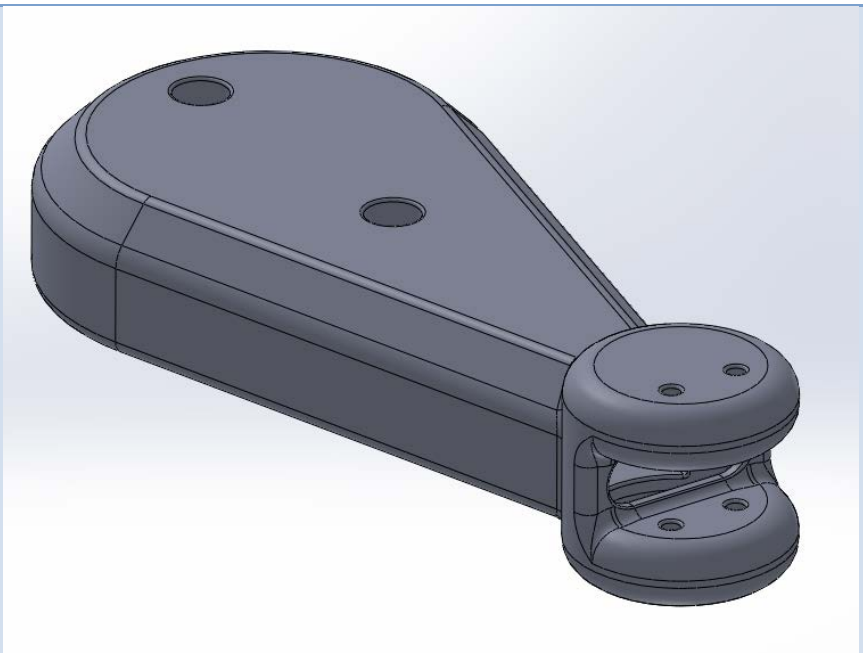 *
JimmyQC_2002_ Shin	10.72	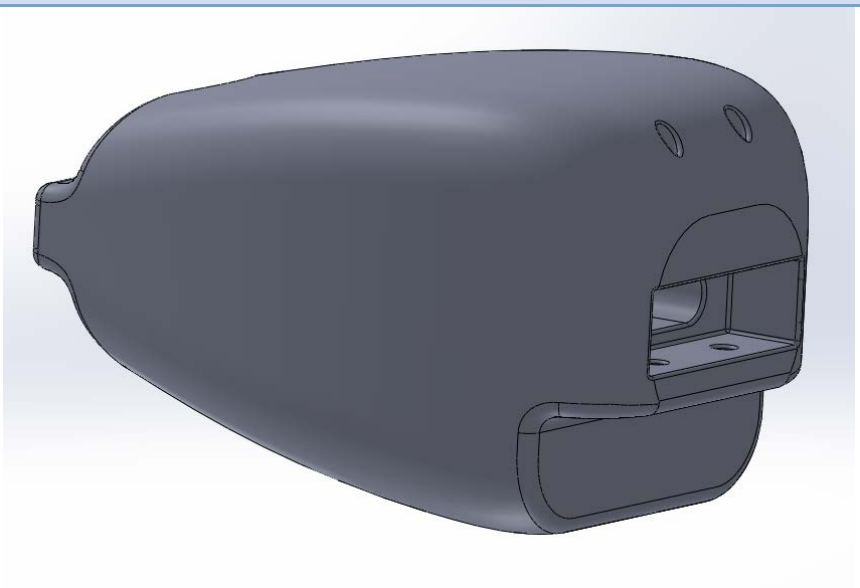 *

JimmyQC_3001R_Bottom	13.39	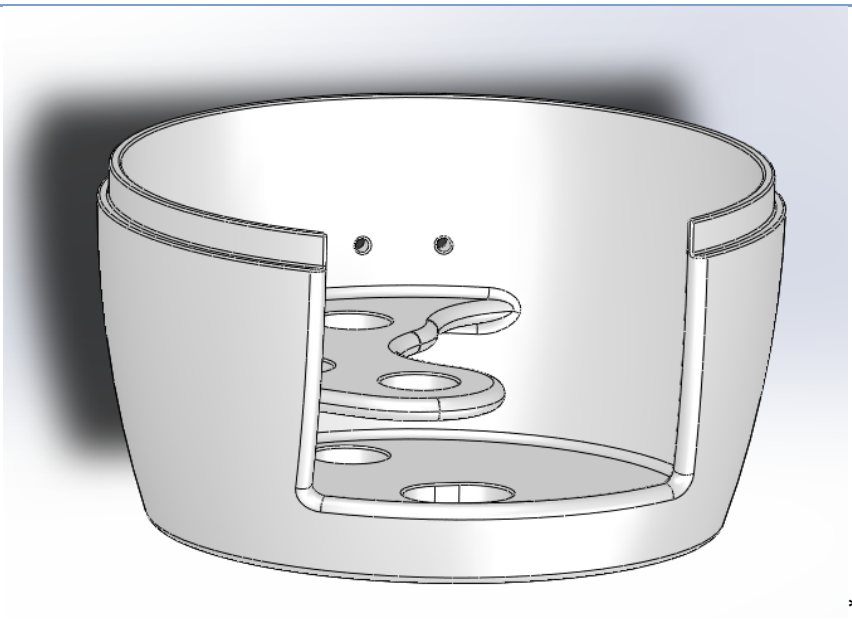 *
JimmyQC_3001L_Bottom	13.39	Ditto
JimmyQC_3002_Rocker1	0.30	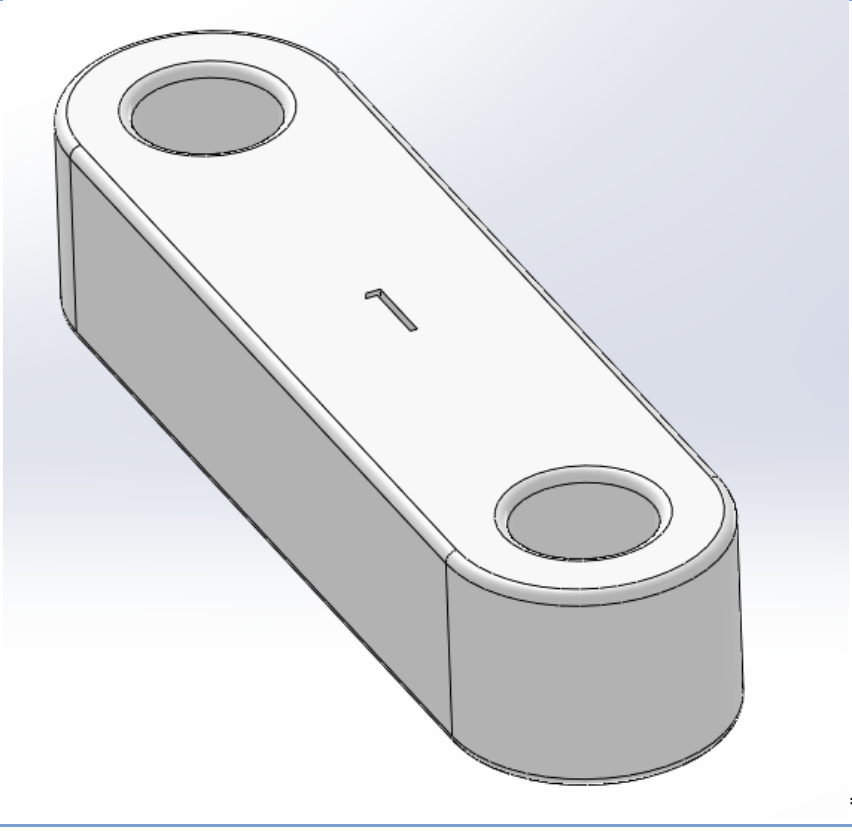 *

JimmyQC_3003_ Rocker2	0.34	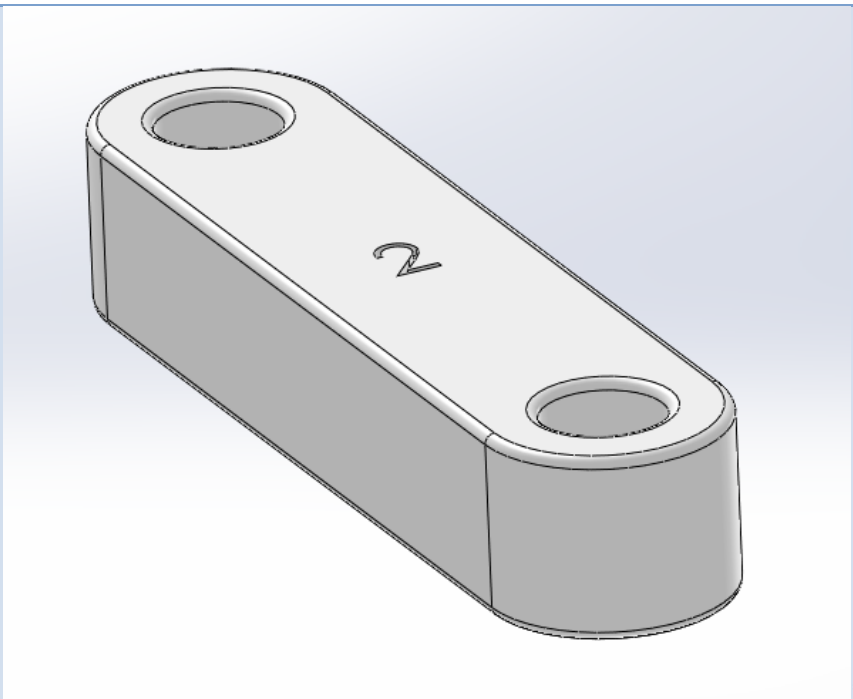 *
JimmyQC_3004_ Rocker3	0.44	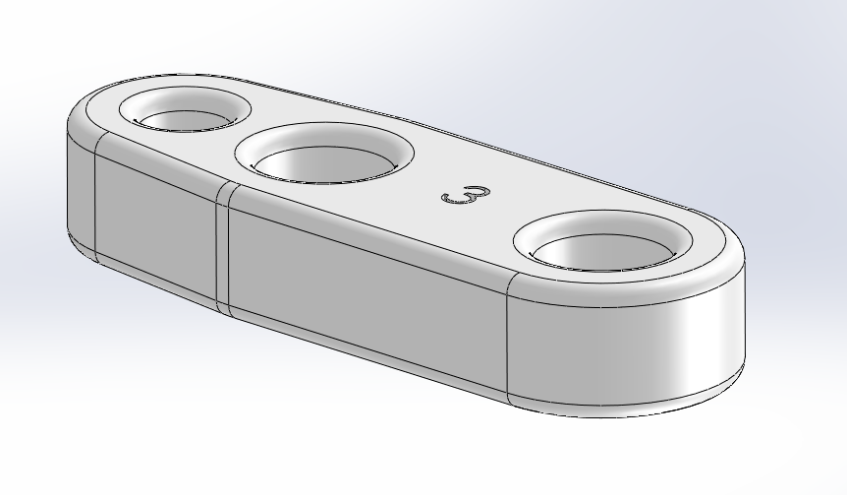 *

JimmyQC_3005_ Rocker4	0.09	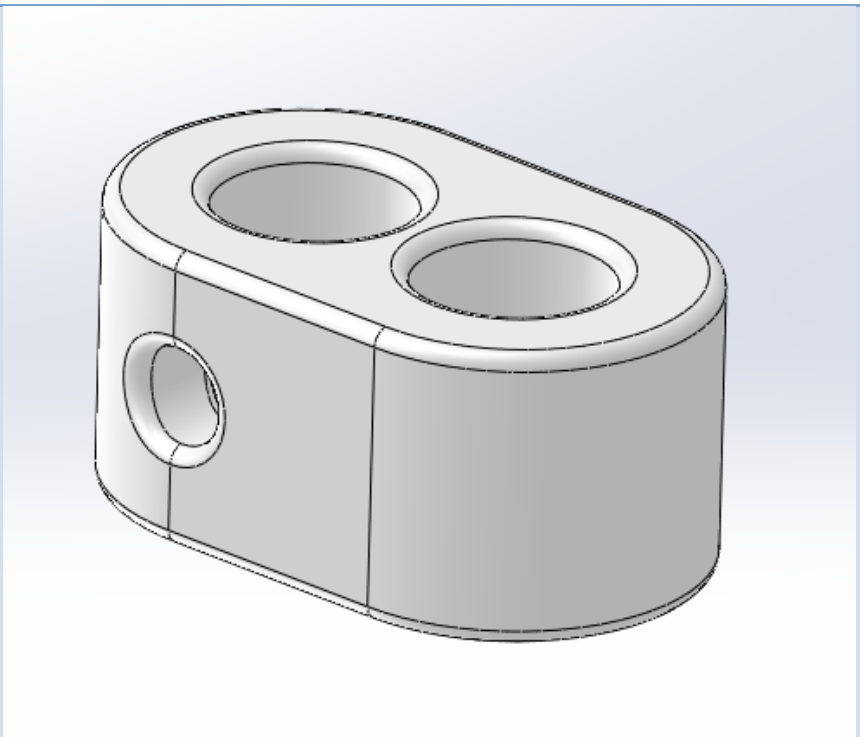 *
JimmyQC_3101_ Motor_Mount	3.58	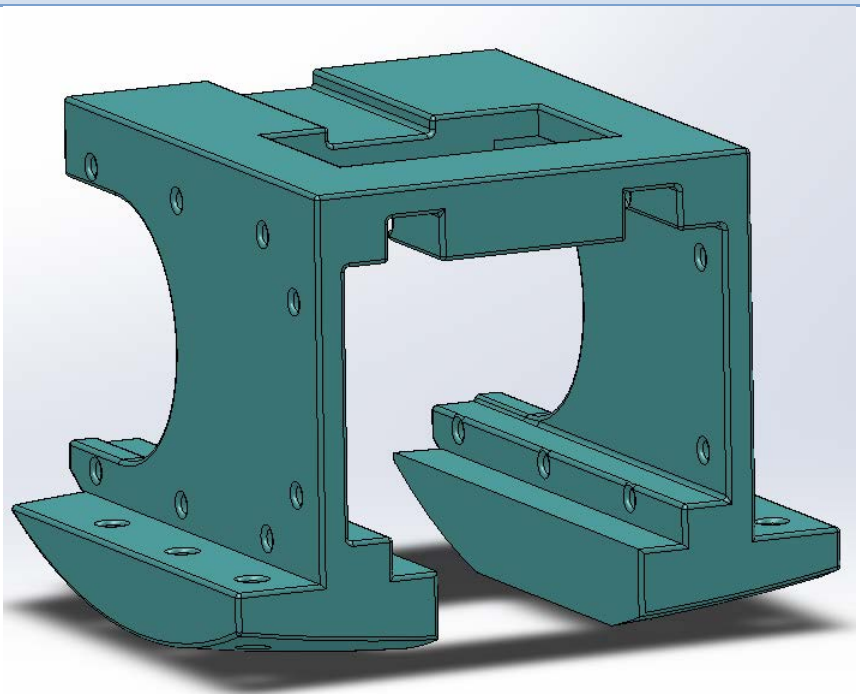 *

JimmyQC_4001_ Bicep	4.93 + 4.37	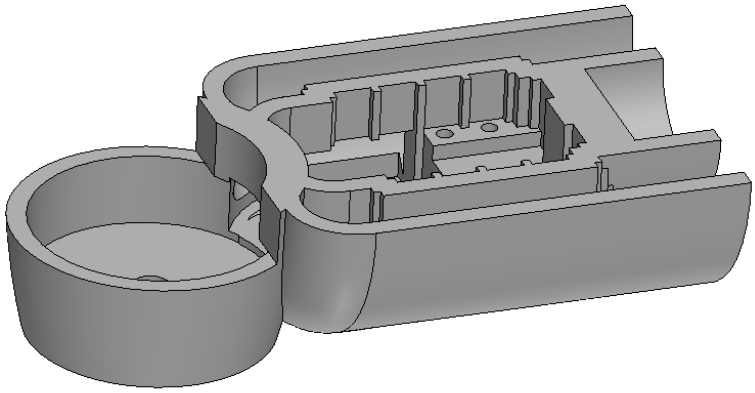 *
JimmyQC_4002_ Motor_Gear	0.31	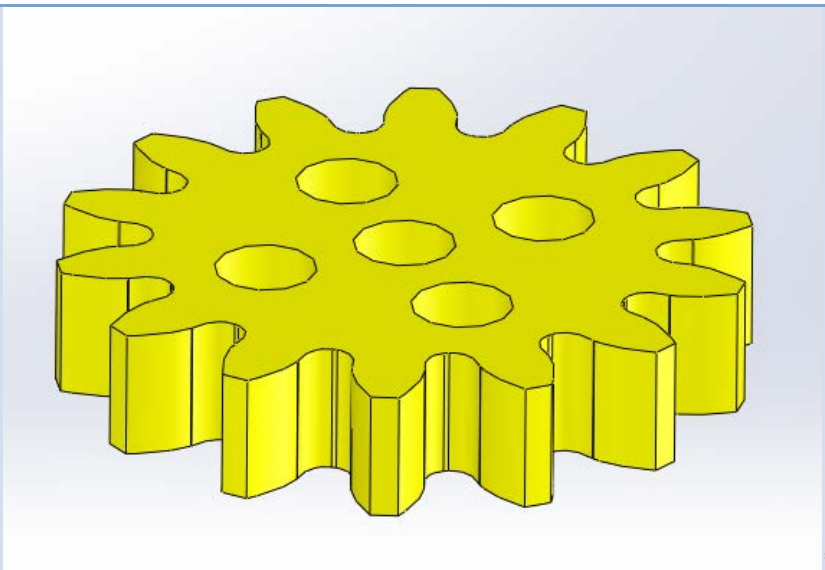 *
JimmyQC_4003_ Forearm_Gear	0.36	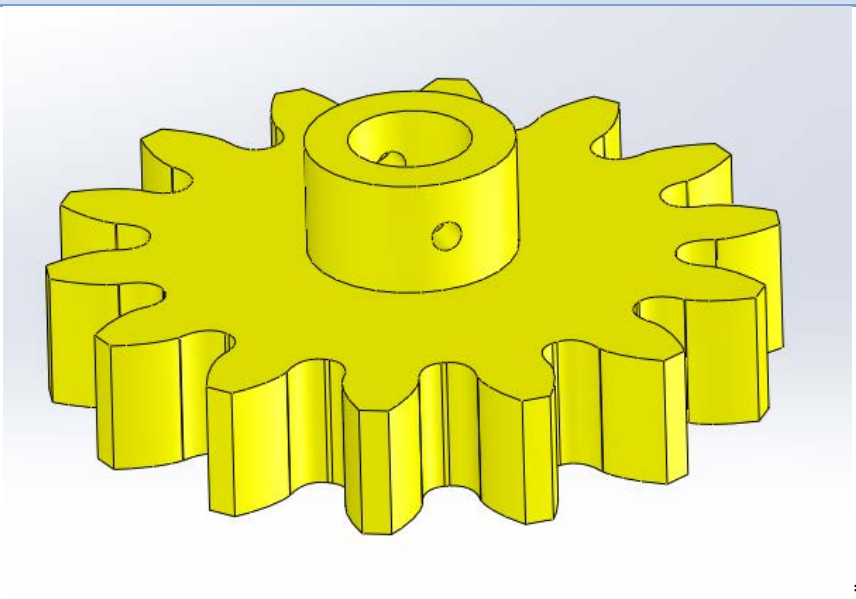 *

JimmyQC_4005_ Forearm_and_Hand	8.39	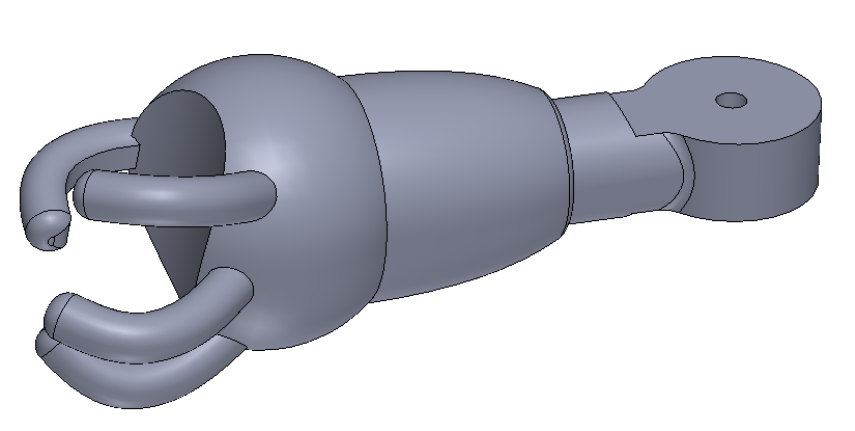 *
JimmyQC_4006_ Shoulder Gimble	1.59	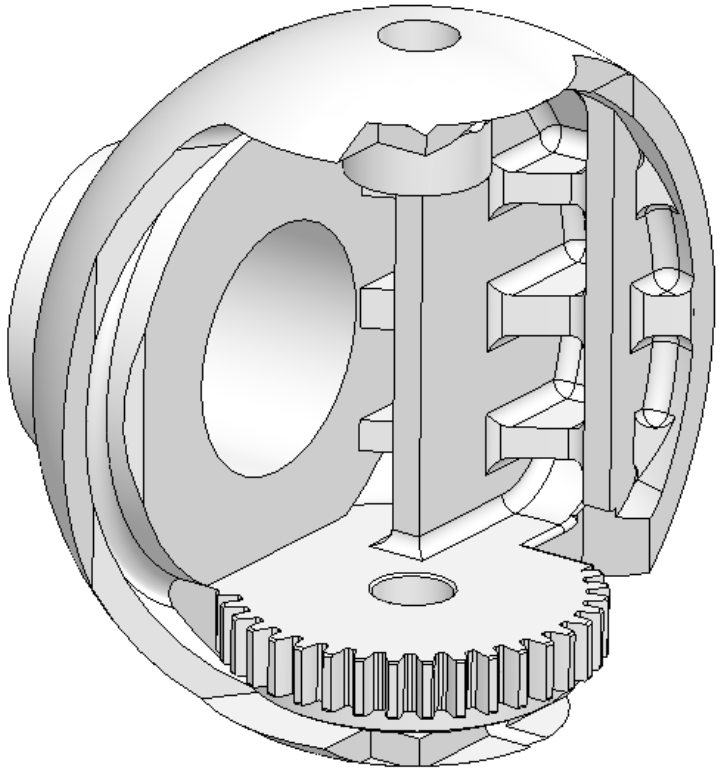 *

JimmyQC_5001_ Shoulder_Motor _Mount	2.05	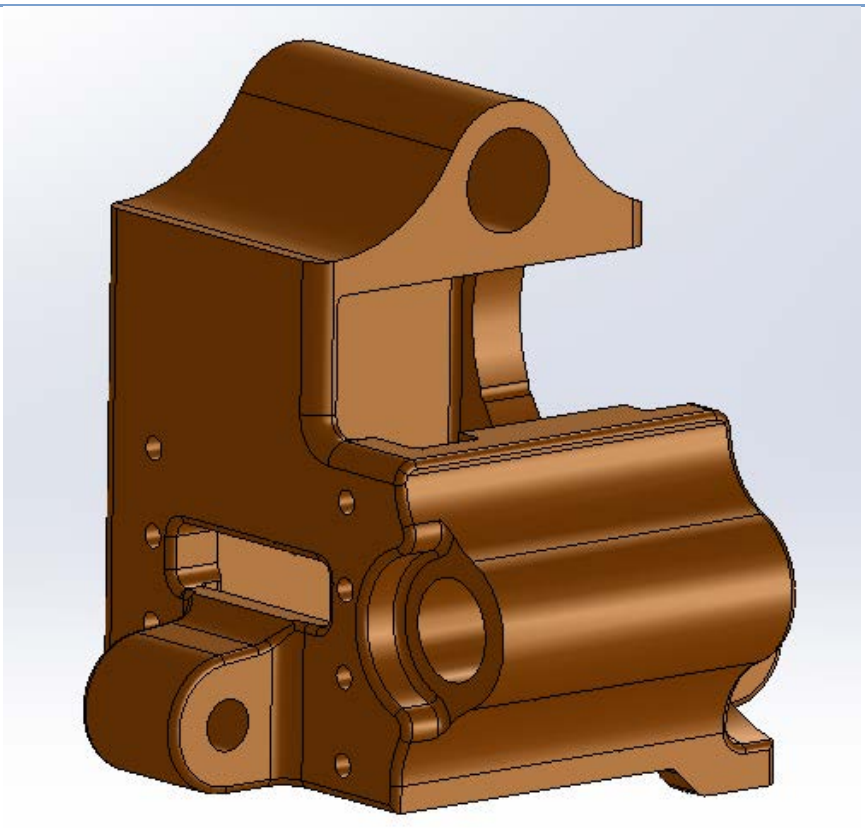 *
JimmyQC_5009_ Shoulder_Gear	0.19	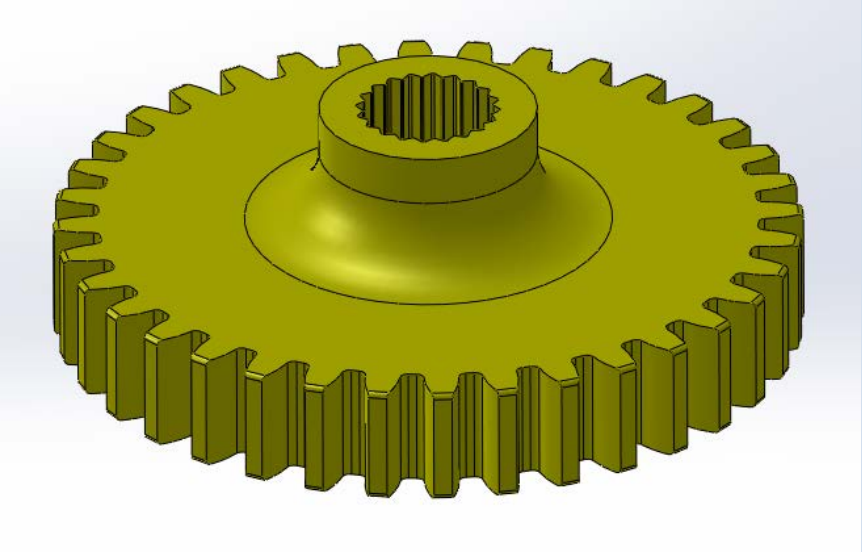 *

JimmyQC_6001_ Neck 0.42	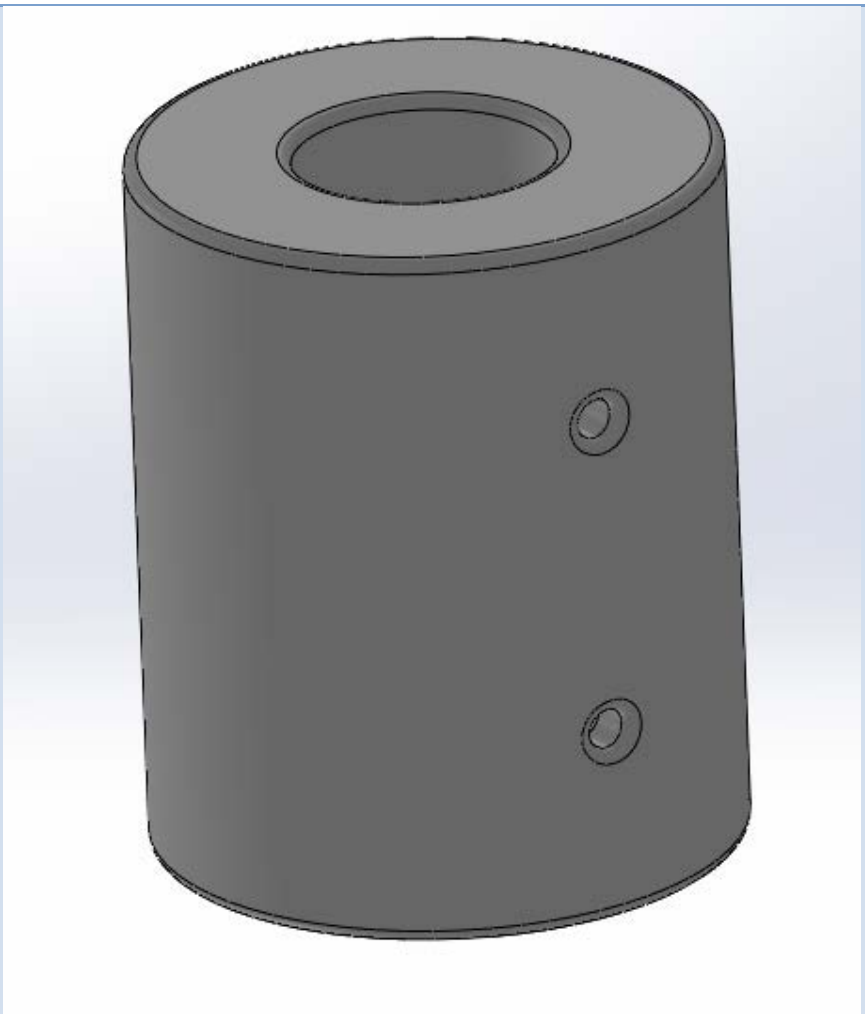 *

JimmyQC_6101_ MotorAttachment	0.62	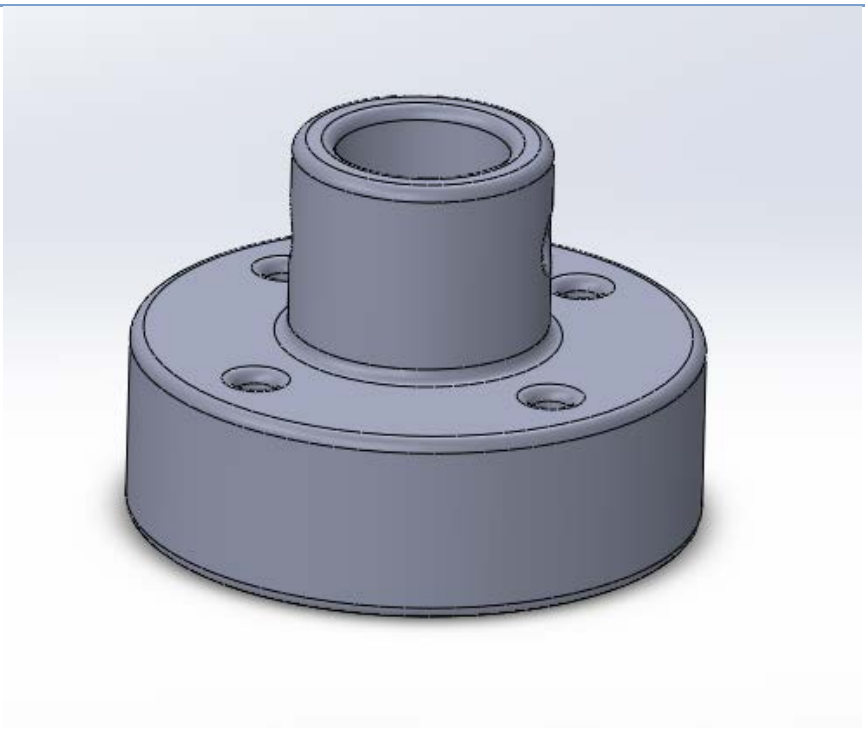 *
JimmyQC_6201_ ChinTop	4.63	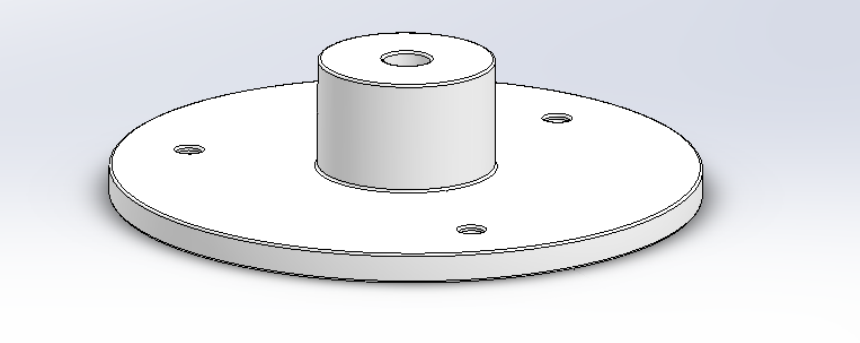 *

JimmyQC_6202_ ChinBottom	5.04	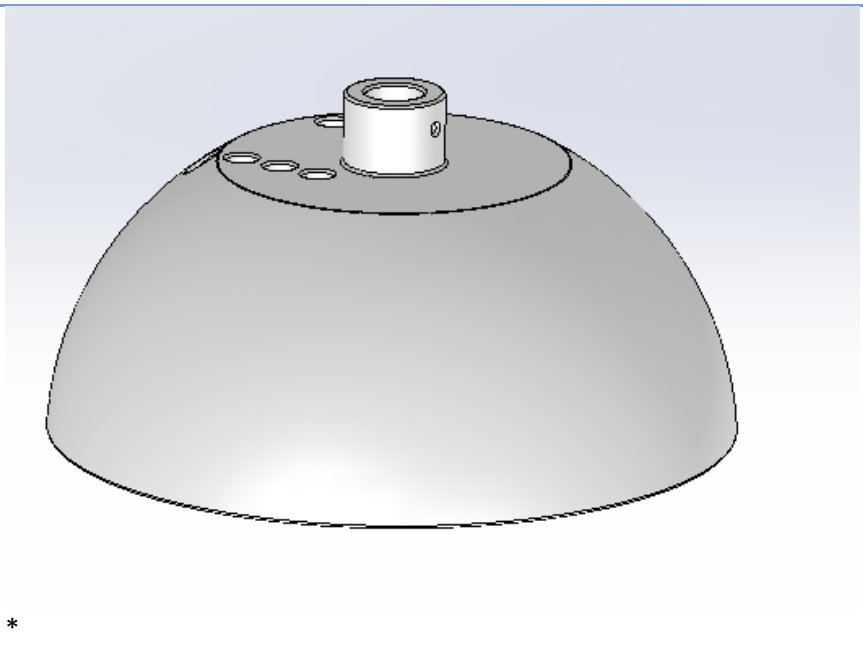 *
JimmyQC_6301_ HeadTop	114.04	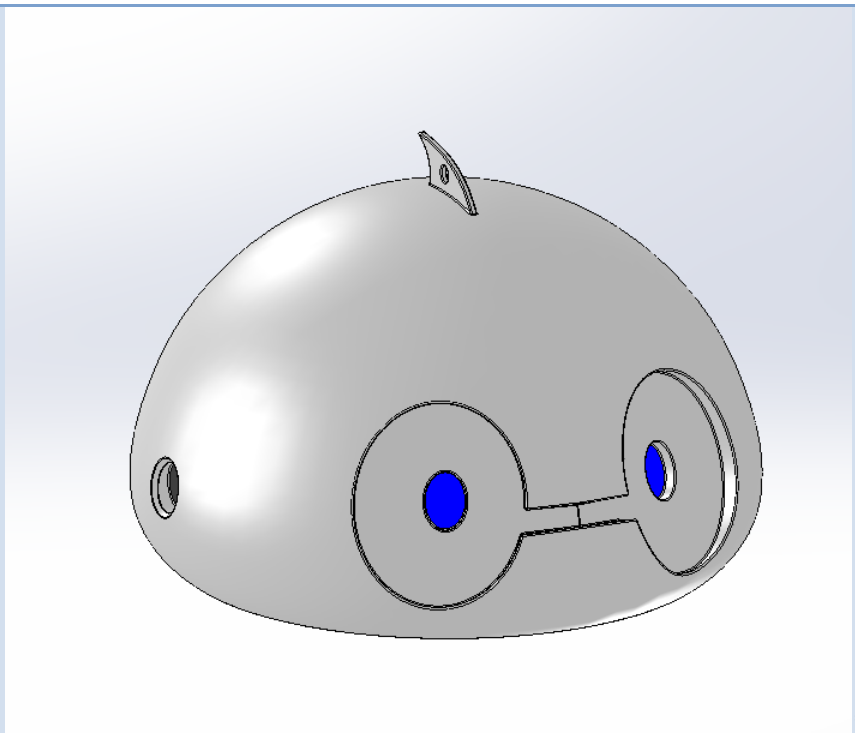 *

JimmyQC_6302_ HeadBottom	11.59	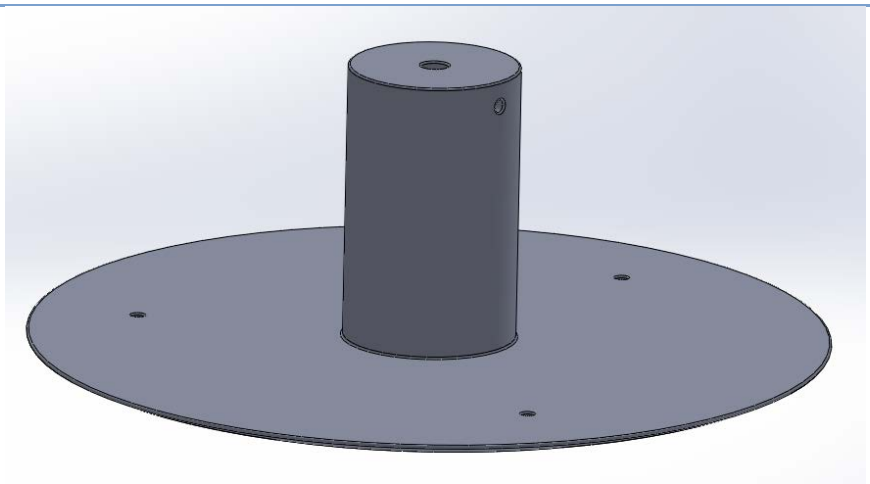 *
JimmyQC_7014_ COM_PlatformTop	1.57	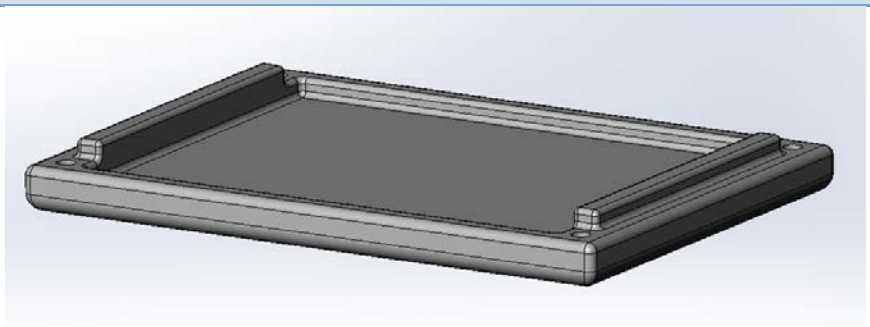 *
JimmyQC_7004_ COM_Platform	4.7	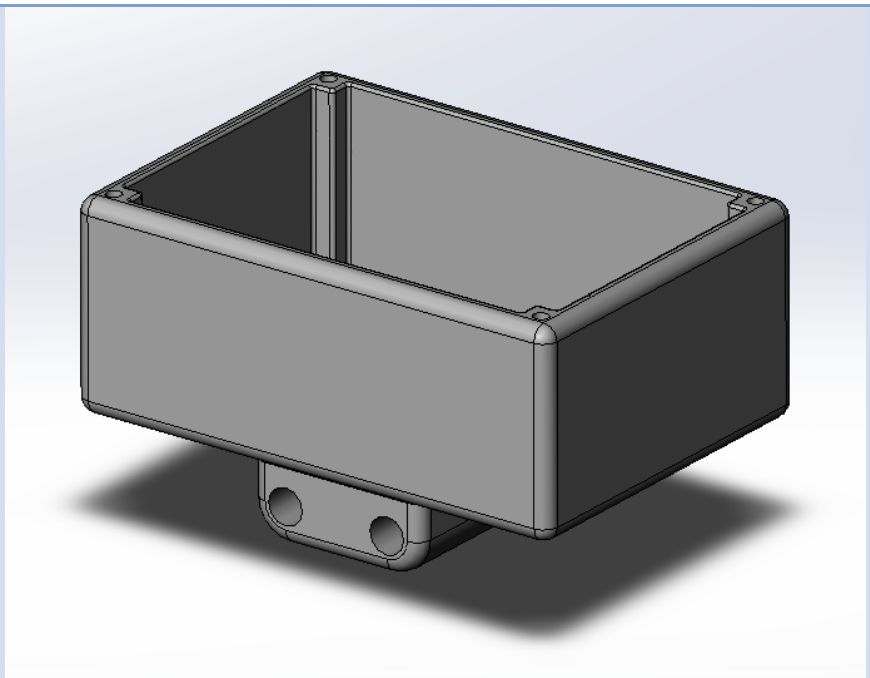 *

JimmyQC_7011_ ShortGearMount	1.9	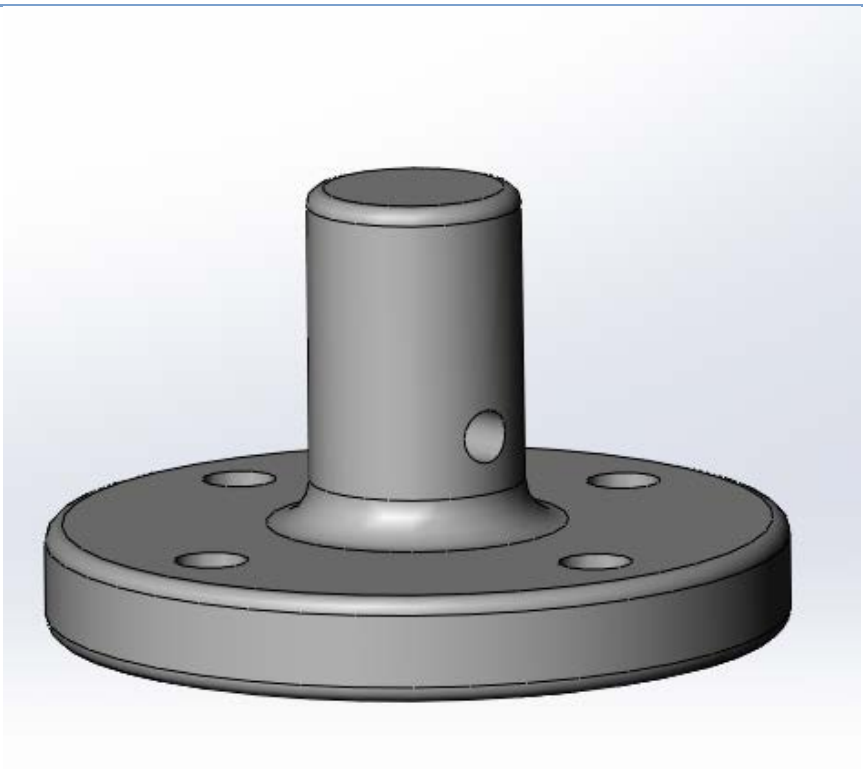 *
JimmyQC_7006_ Torso	11.99	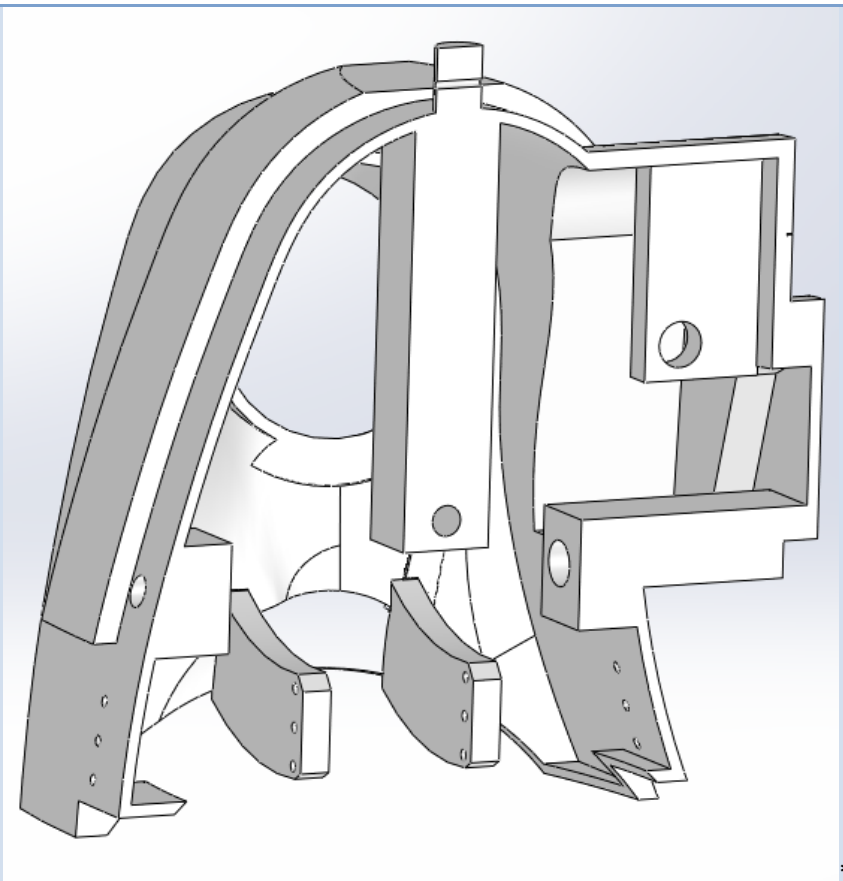 *

Future Design Considerations and To Do Before Printing

There are a few things that our team ran out of time to complete in the semester. It turns out that it's hard to design a humanoid robot in a month! If you want your JimmyQC to spotlessly print and slot together, you should do the following:

- Spec belts to transmit motion from the pelvis motor to the pelvis drive shaft and the shoulder drive shaft
- Design an idler for this belt
- Find more specific specs for the pulley that drives this belt, in order to spec it more appropriately
- The belt between the motor and the drive shaft in the pelvis could/should be replaced with a gear
- In the pelvis,
    - Regularize the mounting features on the pelvis' motor mount
    - Establish a method of attaching the gear/pulley to the pelvis motor
- In the torso,
    - The locations of the shoulders and COM swinging linkages in the torso could be optimized to not interfere with the structure
    - Improve access to inside of torso to assemble shoulders
    - The lofts in the torso (created externally for artistic reasons) should be fixed to not intersect
    - The walls of the torso (shell feature) should be made more thick
- In the head,
    - The chin piece and motor attachment in the head should have some threaded inserts to increase their robustness
    - Find a place for the electronics so that Jimmy can look around
- In the arm,
    - Modify the hands to appear more human like
    - Use a smaller motor than AX-12 (would have to be non-dynamixel) to actuate the hands
    - Make mounting the motor easier
- Foot
    - Add threaded inserts to allow for best attachment for the motor
    - Properly shell out solid chunks
    - Center the servo horn with respect to the base of the foot.
    - Make the left foot so that you don't have to epoxy it together
- All of the parts should be checked for fillets. If there is any edge that is not filleted to at least the resolution of your printer, it needs to be.
- The part numbers within solidworks do not always match the part names, and in a perfect world, they would
- Some of our fasteners are repeats, and can be condensed to simplify our bill of materials.

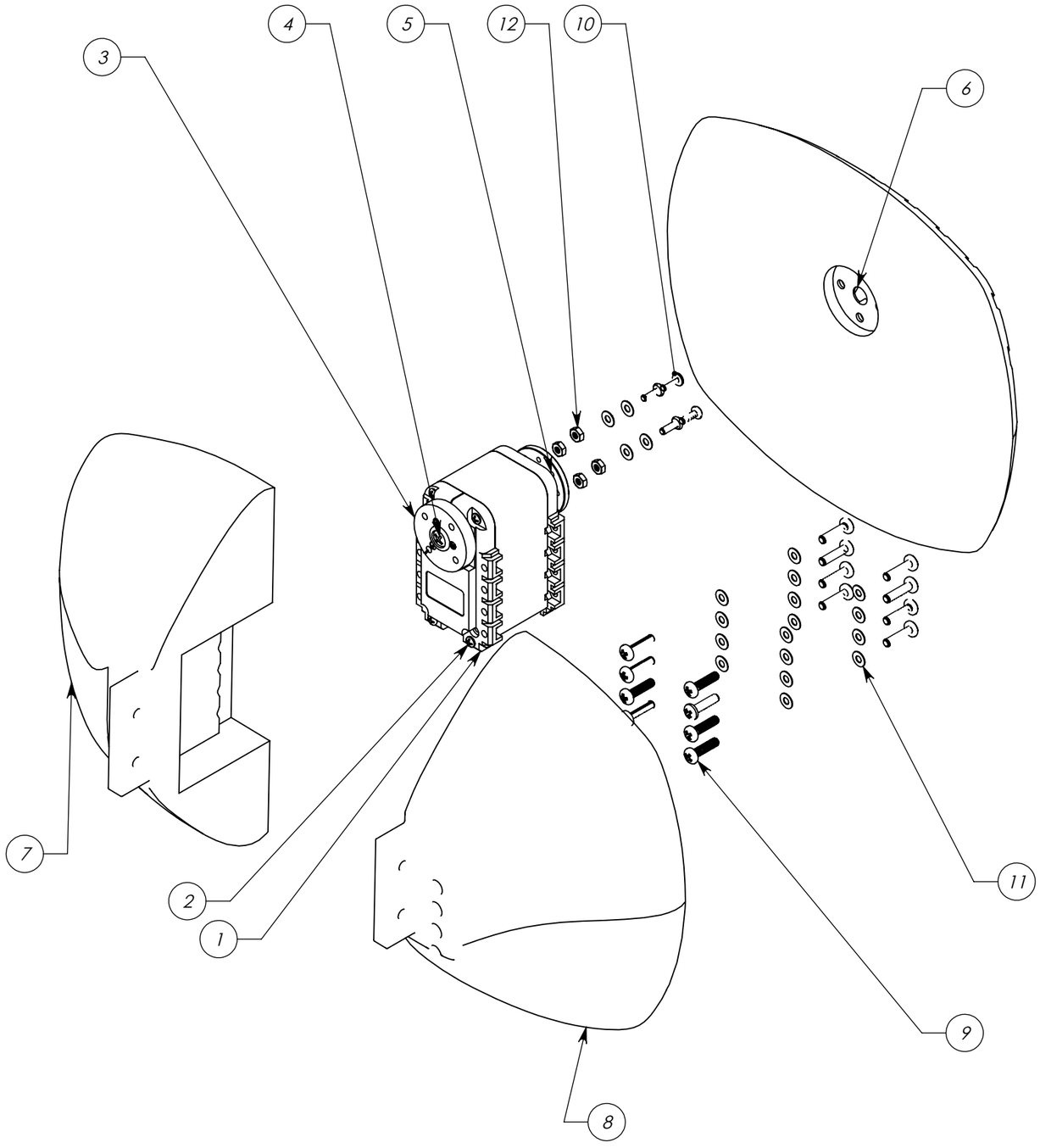

ITEM NO.	PART NUMBER	DESCRIPTION	QTY.
1	JIMMYQC_8101	ROBOTIS AX-12 MOTOR HOUSING	1
2	JIMMYQC_8103	ROBOTIS AX-12 HOUSING SCREW	4
3	JIMMYQC_8105	ROBOTIS AX-12 SERVO HORN	1
4	JIMMYQC_8106	ROBOTIS AX-12 RETAINING SCREW	1
5	JimmyQC_8107_IdlerHorn		1
6	JimmyQC_1001_RightFootBottom		1
7	JimmyQC_1003_RightFoot_TopBack		1
8	JimmyQC_1002_RightFoot_TopFront		1
9	JimmyQC_7015_MachineScrew_M2.5x8	Pan Head Phillips Machine Screw, M2.5, L 10 mm	16
10	90116A010		4
11	JimmyQC_7018_Washer_M2.5	M2 washer	20
12	JimmyQC_9005_AX12_MountingNut	M2.5 NUT	4
13	JIMMYQC_8102	ROBOTIS AX-12 DRIVING SPLINE	1
14	JIMMYQC_8104	ROBOTIS AX-12 CONTROLLOR CONNECT POINT	2
15	JimmyQC_8108_IdlerBearing		1
16	JimmyQC_8109_IdlerCapBearing		1
17	90116A112		1

QTY: 1

UNLESS OTHERWISE SPECIFIED:

DIMENSIONING AND TOLERANCING PER ASME Y14.5M-1994.
DIMENSIONS ARE IN INCHES.
DE-BURR AND BREAK ALL SHARP EDGES .003 MIN.
TOLERANCES ARE: X.XX = ±0.01, X.XXX = ±0.005, X.XXXX = ±0.001, ANGLES: ±0.5°

PERPENDICULARITY: ⊥ 0.001" / INCH
CONCENTRICITY: ◎ 0.002" T.I.R.
PARALLELISM: // 0.001" / INCH
FLATNESS: ▱ 0.001" / INCH
ROUGHNESS: 125 √

Franklin W. Olin College of Engineering

TITLE: **RIGHT FOOT ASSEMBLY**

MATERIAL: **ABS, ALUMINUM**

NOTICE
THIS DRAWING IS FOR MECH-DESIGN USE AND CAN BE REDISTRIBUTED AND REUSED AT WILL.

	INIT.	DATE
ENGINEER	JB	12/10/13
DRAWN	JB	12/12/13
CHECKED	BAR	12/13/13

SIZE: **B** | DWG. NO. **JimmyQC_1000_FootASM** | REV **A**

SCALE: 2:3 | DO NOT SCALE PRINT | SHEET 1 OF 1

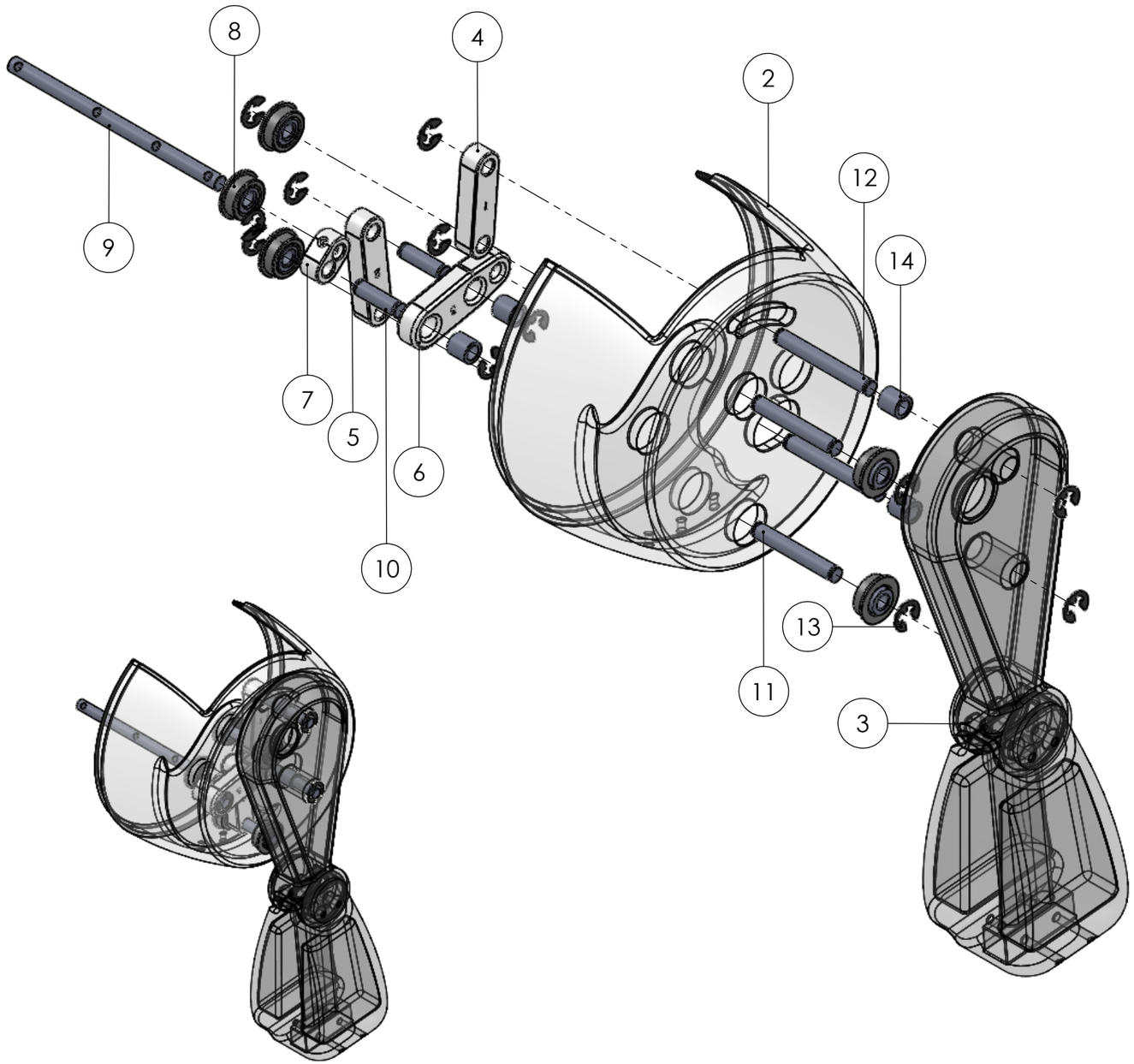

ITEM NO.	SW-File Name(File Name)	DESCRIPTION	FULL ASSEM QTY.
1	JimmyQC_3001L_Bottom	Bottom	1
2	JimmyQC_3001R_Bottom	Bottom	1
3	JimmyQC_2000_LegASM	Leg Assembly	2
4	JimmyQC_3002_Rocker1	Upper Rocker	2
5	JimmyQC_3003_Rocker2	Lower Rocker	2
6	JimmyQC_3004_Rocker3	Horizontal Rocker	2
7	JimmyQC_3005_Rocker4	Driving Linkage	2
8	JimmyQC_9015_HipBearing	Hip Ball Bearing	10
9	JimmyQC_3006_Drive_Shaft	Pelvis Drive Shaft	1
10	JimmyQC_3009_Short_Shaft	Short Shaft	4
11	JimmyQC_3007_Internal_Shaft	Internal Shaft	4
12	JimmyQC_3008_External_Shaft	External Shaft	4
13	JimmyQC_9014_0.25_RetainingRing	1/4" RETAINING RING	24
14	JimmyQC_9017_0.25_0.375_Sleve_Bearing	Bushing for 1/4 in shaft, 3/8 in long	8
15	JimmyQC_3100_Motor_Mount_Subassembly	Subassembly for Pelvis Motor Mounting Stuff	1
16	JimmyQC_4012_Shoulder_Pulley	Shoulder_Pulley	2

BOM REFLECTS FULL ASSEMBLY, IMAGE ONLY DEPICTS HALF.
MISSING PARTS HIDDEN FOR SIMPLICITY, RESULTING IN MISSING BALLOONS

UNLESS OTHERWISE SPECIFIED:

DIMENSIONING AND TOLERANCING PER ASME Y14.5M-1994.	PERPENDICULARITY:	⊥ 0.001" / INCH	
DIMENSIONS ARE IN INCHES.	CONCENTRICITY:	◎ 0.002" T.I.R.	
DE-BURR AND BREAK ALL SHARP EDGES .003 MIN.	PARALLELISM:	// 0.001" / INCH	
TOLERANCES ARE: X.XX = ±0.01, X.XXX = ±0.005, X.XXXX= ±0.001, ANGLES: ±0.5°	FLATNESS:	▱ 0.001" / INCH	
	ROUGHNESS:	125	

Franklin W. Olin College of Engineering

TITLE: **HALF PELVIS EXPLODED**

NOTICE
THIS DRAWING IS FOR MECH-DESIGN USE AND CAN BE REDISTRIBUTED AND REUSED AT WILL.

	INIT.	DATE
ENGINEER	DS	12/13/13
DRAWN	DS	12/13/13
CHECKED	JB	12/13/13

SIZE: B | DWG. NO.: JimmyQC_3000_PelvisASM | REV: AA

SCALE: 1:2 | DO NOT SCALE PRINT | SHEET 1 OF 1

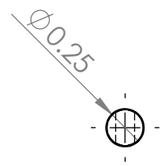

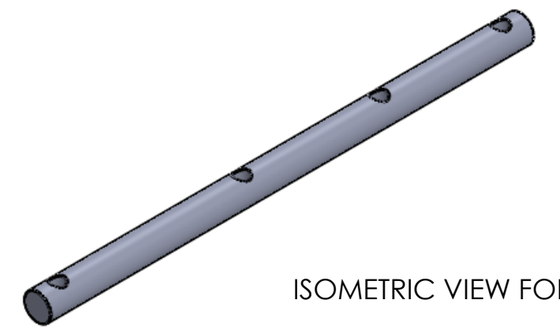

ISOMETRIC VIEW FOR REFERENCE

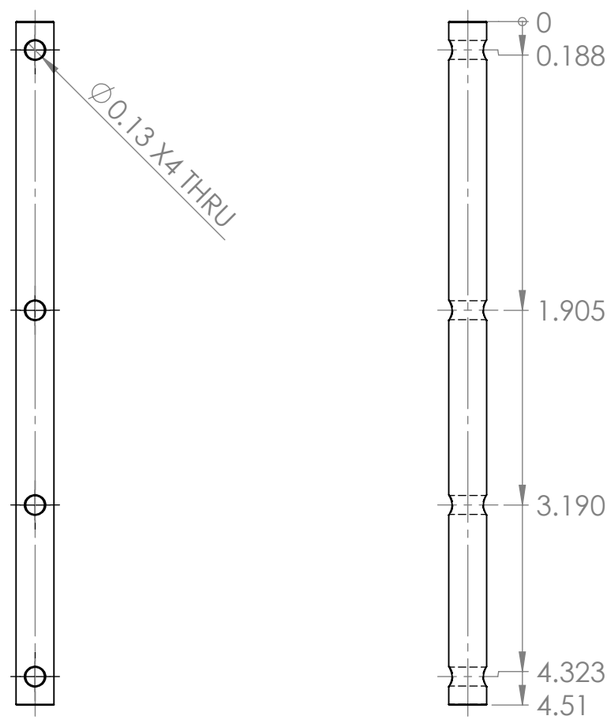

QTY:1

STOCK IS 1/4" HARDENED STEEL SHAFT

UNLESS OTHERWISE SPECIFIED:		
DIMENSIONING AND TOLERANCING PER ASME Y14.5M-1994.	PERPENDICULARITY:	⊥ 0.001" / INCH
DIMENSIONS ARE IN INCHES.	CONCENTRICITY:	◎ 0.002" T.I.R.
DE-BURR AND BREAK ALL SHARP EDGES .003 MIN.	PARALLELISM:	// 0.001" / INCH
TOLERANCES ARE: X.XX = ±0.01, X.XXX = ±0.005, X.XXXX= ±0.001, ANGLES: ±0.5°	FLATNESS:	▱ 0.001" / INCH
	ROUGHNESS:	125

Franklin W. Olin College of Engineering

TITLE: **HIP LINKAGE DRIVE SHAFT**

MATERIAL: **STEEL**

FINISH: **STOCK**

NOTICE
THIS DRAWING IS FOR MECH-DESIGN USE AND CAN BE REDISTRIBUTED AND REUSED AT WILL.

	INIT.	DATE
ENGINEER	DS	12/6/13
DRAWN	DS	12/13/13
CHECKED	CF	12/13/13

SIZE: **B** | DWG. NO. **JimmyQC_3006_Drive_Shaft** | REV **D**

SCALE: NONE | DO NOT SCALE PRINT | SHEET 1 OF 1

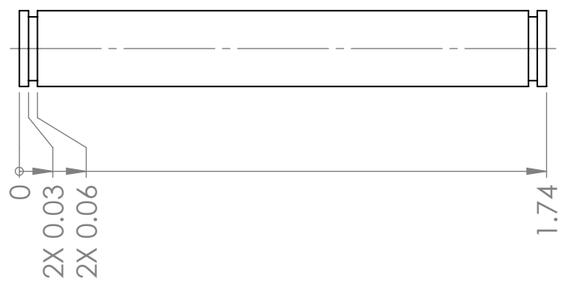

ISOMETRIC VIEW FOR REFERENCE

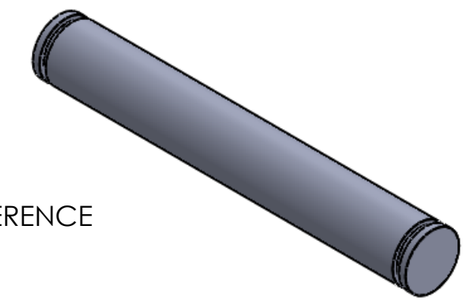

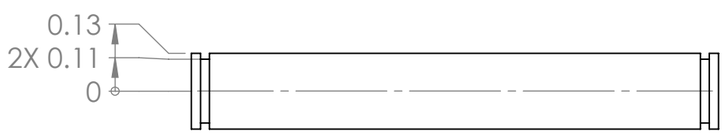

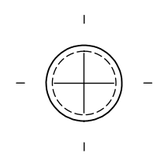

QTY:4

STOCK IS 1/4" HARDENED STEEL SHAFT

MATERIAL:	STEEL
FINISH:	STOCK

UNLESS OTHERWISE SPECIFIED:

DIMENSIONING AND TOLERANCING PER ASME Y14.5M-1994.	PERPENDICULARITY:	⊥	0.001" / INCH
DIMENSIONS ARE IN INCHES.	CONCENTRICITY:	◎	0.002" T.I.R.
DE-BURR AND BREAK ALL SHARP EDGES .003 MIN.	PARALLELISM:	//	0.001" / INCH
TOLERANCES ARE: X.XX = ±0.01, X.XXX = ±0.005, X.XXXX= ±0.001, ANGLES: ±0.5°	FLATNESS:	▱	0.001" / INCH
	ROUGHNESS:		125 √

NOTICE

THIS DRAWING IS FOR MECH-DESIGN USE AND CAN BE REDISTRIBUTED AND REUSED AT WILL.

	INIT.	DATE
ENGINEER	DS	12/6/13
DRAWN	DS	12/13/13
CHECKED	CF	12/13/13

Franklin W. Olin College of Engineering

TITLE: **HIP LINKAGE INTERNAL SHAFT**

SIZE	DWG. NO.	REV
B	JimmyQC_3007_Internal_Shaft	A

SCALE: 2:1 | DO NOT SCALE PRINT | SHEET 1 OF 1

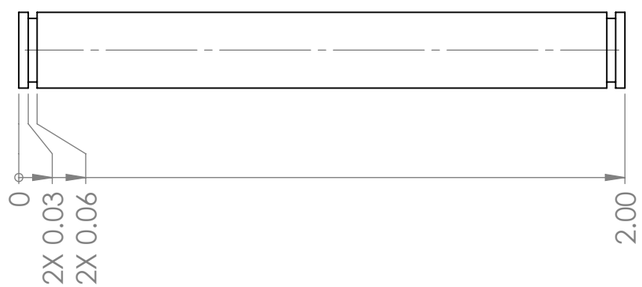

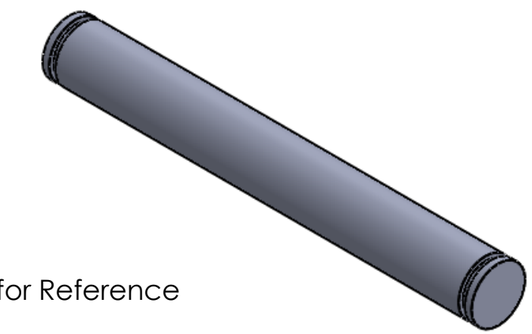

Isometric View for Reference

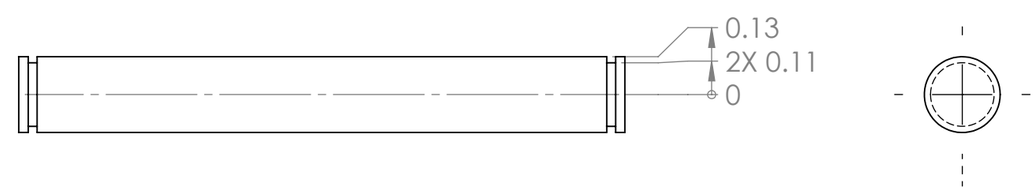

QTY:4

STOCK IS 1/4" HARDENED STEEL SHAFT

MATERIAL:	STEEL		
FINISH:	STOCK		

UNLESS OTHERWISE SPECIFIED:

DIMENSIONING AND TOLERANCING PER ASME Y14.5M-1994.	PERPENDICULARITY:	⊥	0.001" / INCH
DIMENSIONS ARE IN INCHES.	CONCENTRICITY:	◎	0.002" T.I.R.
DE-BURR AND BREAK ALL SHARP EDGES .003 MIN.	PARALLELISM:	//	0.001" / INCH
TOLERANCES ARE: X.XX = ±0.01, X.XXX = ±0.005, X.XXXX= ±0.001, ANGLES: ±0.5°	FLATNESS:	▱	0.001" / INCH
	ROUGHNESS:		125 √

NOTICE

THIS DRAWING IS FOR MECH-DESIGN USE AND CAN BE REDISTRIBUTED AND REUSED AT WILL.

	INIT.	DATE
ENGINEER	DS	12/6/13
DRAWN	DS	12/5/13
CHECKED	JB	12/13/13

Franklin W. Olin College of Engineering

TITLE: **HIP/LINKAGE EXTERNAL SHAFT**

SIZE	DWG. NO.	REV
B	JimmyQC_3008_External_Shaft	A

SCALE: 2:1 | DO NOT SCALE PRINT | SHEET 1 OF 1

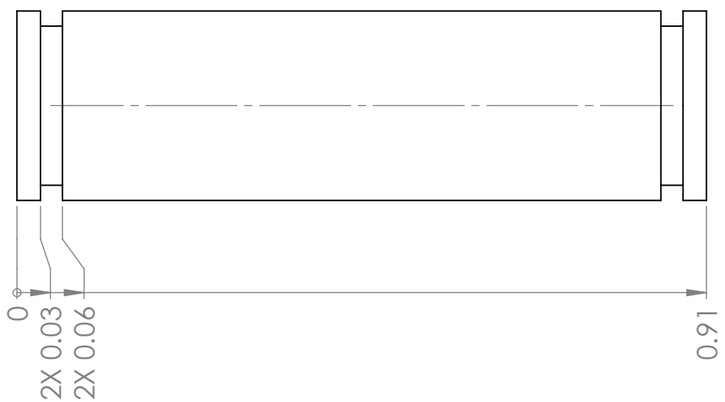

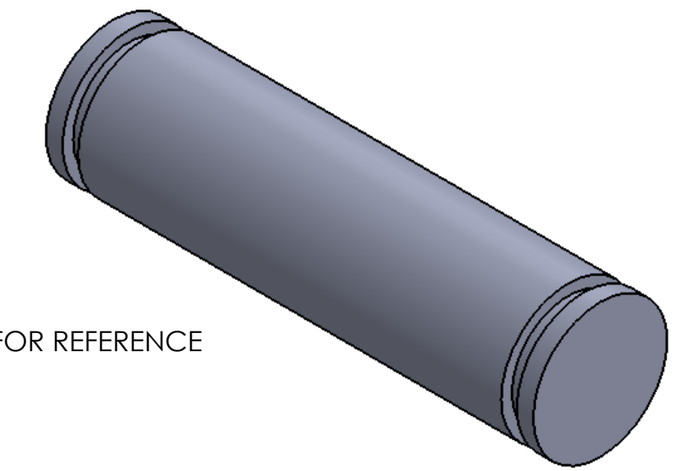

ISOMETRIC VIEW FOR REFERENCE

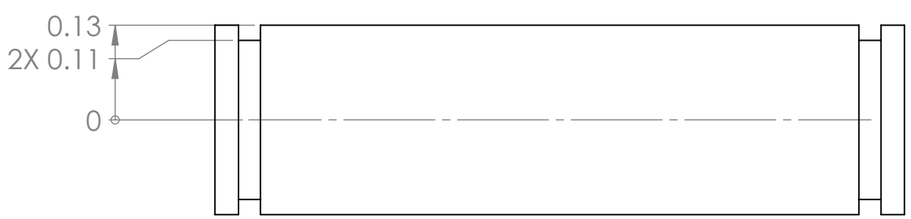

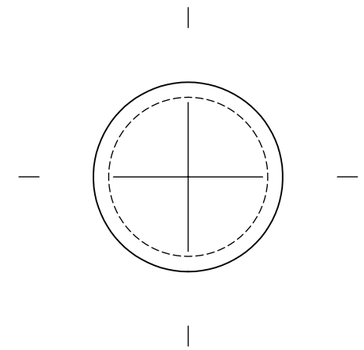

QTY:4

STOCK IS 1/4" HARDENED STEEL SHAFT

MATERIAL:	STEEL
FINISH:	STOCK

UNLESS OTHERWISE SPECIFIED:

DIMENSIONING AND TOLERANCING PER ASME Y14.5M-1994.	PERPENDICULARITY:	⊥	0.001" / INCH
DIMENSIONS ARE IN INCHES.	CONCENTRICITY:	◎	0.002" T.I.R.
DE-BURR AND BREAK ALL SHARP EDGES .003 MIN.	PARALLELISM:	//	0.001" / INCH
TOLERANCES ARE: X.XX = ±0.01, X.XXX = ±0.005, X.XXXX= ±0.001, ANGLES: ±0.5°	FLATNESS:	▱	0.001" / INCH
	ROUGHNESS:		125 √

NOTICE

THIS DRAWING IS FOR MECH-DESIGN USE AND CAN BE REDISTRIBUTED AND REUSED AT WILL.

	INIT.	DATE
ENGINEER	DS	12/6/13
DRAWN	DS	12/13/13
CHECKED	CF	12/13/13

Franklin W. Olin College of Engineering

TITLE: **HIP LINKAGE SHORT SHAFT**

SIZE	DWG. NO.	REV
B	JimmyQC_3009_Short_Shaft	A

5:1 | DO NOT SCALE PRINT | SHEET 1 OF 1

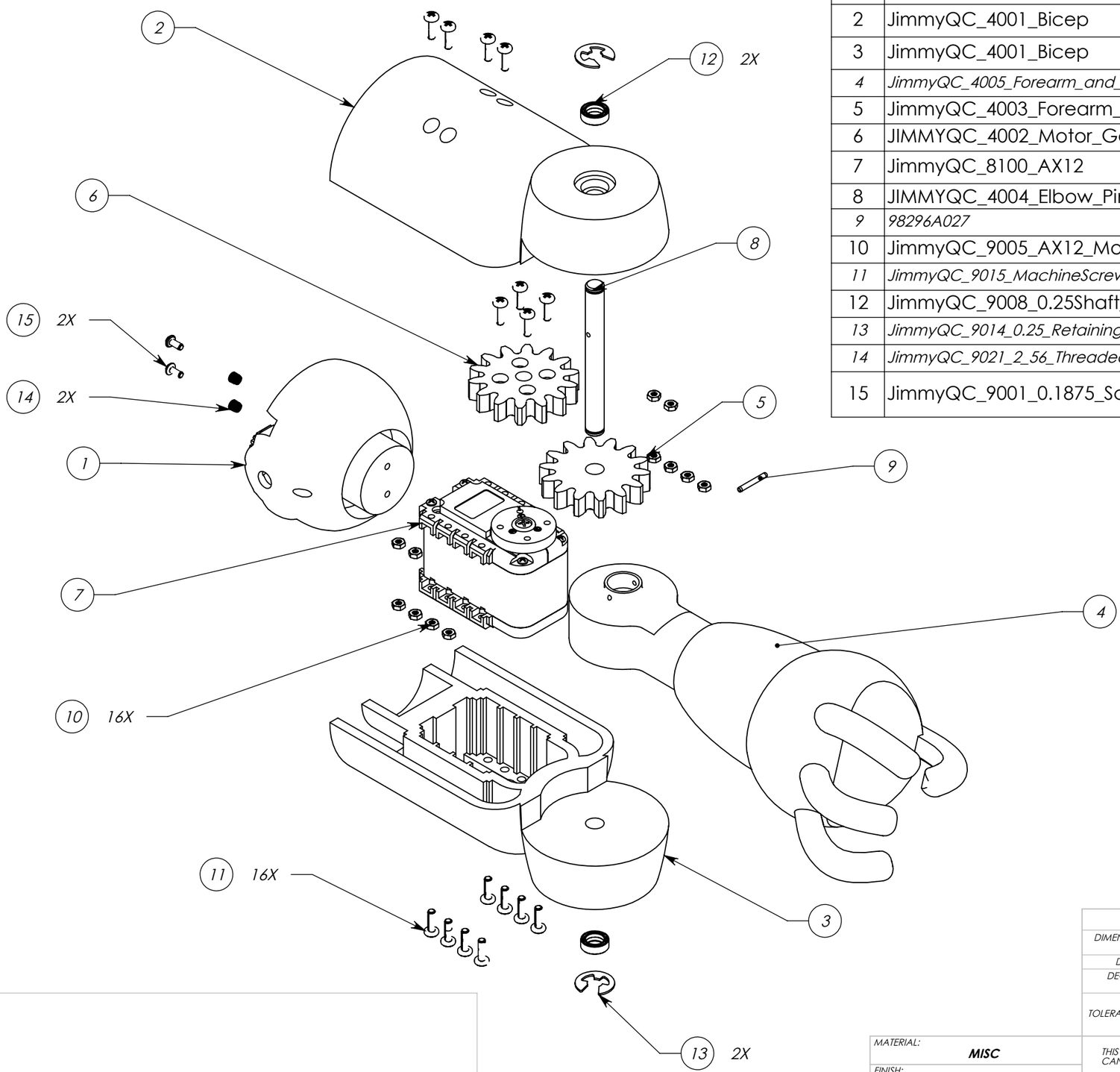

ITEM NO.	PART NUMBER	DESCRIPTION	QTY.
1	JimmyQC_4006_Shoulder_Gimble	SHOULDER GIMBLE	1
2	JimmyQC_4001_Bicep	Posterior Bicep	1
3	JimmyQC_4001_Bicep	Anterior_Bicep	1
4	*JimmyQC_4005_Forearm_and_Hand*	*Hand*	*1*
5	JimmyQC_4003_Forearm_Gear	FOREARM GEAR	1
6	JIMMYQC_4002_Motor_Gear	MOTOR gEAR	1
7	JimmyQC_8100_AX12	ROBOTIS AX-12 MOTOR	1
8	JIMMYQC_4004_Elbow_Pin	1/4" STEEL PIN FOR ELBOW	1
9	*98296A027*	*1/16"D spring pin, 0.5"L*	*1*
10	JimmyQC_9005_AX12_MountingNut	M2.5 NUT	16
11	*JimmyQC_9015_MachineScrew_M2.5x8*	*M2.5x8mm MACHINE SCREW*	*16*
12	JimmyQC_9008_0.25Shaft_BallBearing	1/4" BALL BEARING	2
13	*JimmyQC_9014_0.25_RetainingRing*	*1/4" RETAINING RING*	*2*
14	*JimmyQC_9021_2_56_Threaded_Inserts*	*2-56 Threaded Inserts*	*2*
15	JimmyQC_9001_0.1875_Screw	2-56, 3/16" Pan Head Phillips Machine Screw	2

QTY: 2

UNLESS OTHERWISE SPECIFIED:

DIMENSIONING AND TOLERANCING PER ASME Y14.5M-1994.
DIMENSIONS ARE IN INCHES.
DE-BURR AND BREAK ALL SHARP EDGES .003 MIN.
TOLERANCES ARE: X.XX = ±0.01, X.XXX = ±0.005, X.XXXX= ±0.001, ANGLES: ±0.5°

PERPENDICULARITY: ⊥ 0.001" / INCH
CONCENTRICITY: ◎ 0.002" T.I.R.
PARALLELISM: // 0.001" / INCH
FLATNESS: ▱ 0.001" / INCH
ROUGHNESS: 125

Franklin W. Olin College of Engineering

TITLE: **JIMMYQC_3000_ARM_ASM**

MATERIAL: **MISC**
FINISH: **AS PRINTED**

NOTICE
THIS DRAWING IS FOR MECH-DESIGN USE AND CAN BE REDISTRIBUTED AND REUSED AT WILL.

	INIT.	DATE
ENGINEER	BQ	12/713
DRAWN	BQ	12/7/13
CHECKED	JB	12/13/13

SIZE **B** | DWG. NO. **3000** | REV **A**
SCALE: 2:3 | DO NOT SCALE PRINT | SHEET 1 OF 1

SEE JIMMYQC_4001_BICEP.SLDPRT FOR FULL GEOMETRY

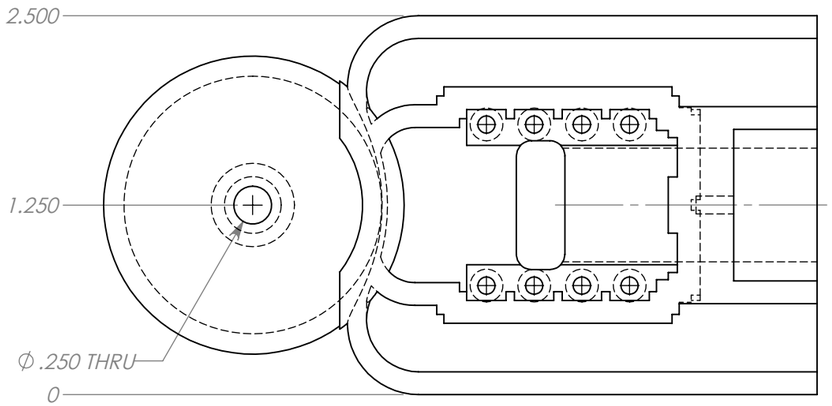

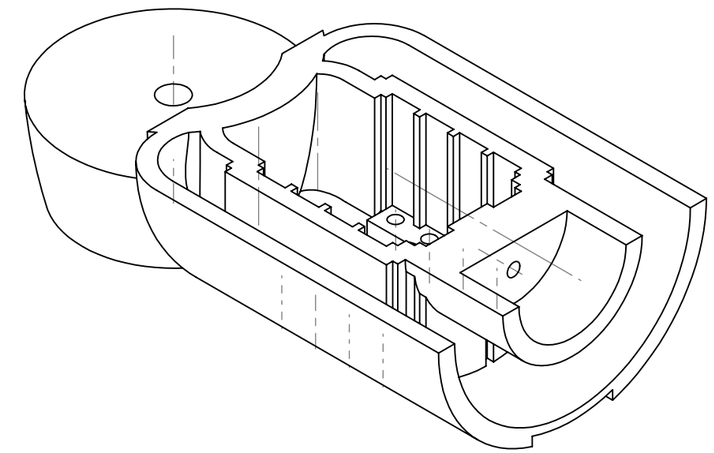

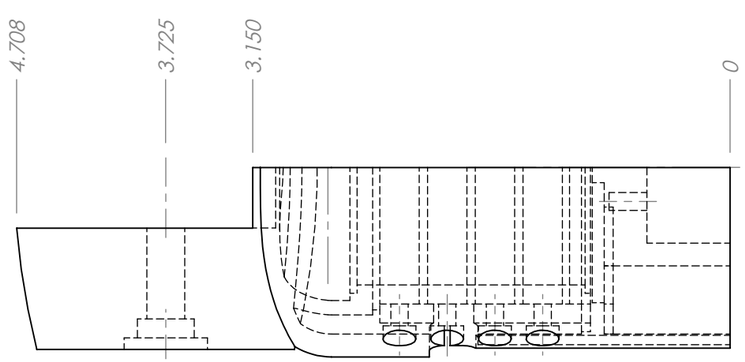

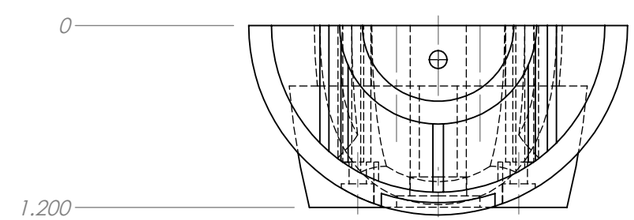

QTY: 2

DRILL OUT 0.25" HOLE TO SIZE

UNLESS OTHERWISE SPECIFIED:			
DIMENSIONING AND TOLERANCING PER ASME Y14.5M-1994.	PERPENDICULARITY:	⊥ 0.001" / INCH	
DIMENSIONS ARE IN INCHES.	CONCENTRICITY:	◎ 0.002" T.I.R.	
DE-BURR AND BREAK ALL SHARP EDGES .003 MIN.	PARALLELISM:	// 0.001" / INCH	
TOLERANCES ARE: X.XX = ±0.01, X.XXX = ±0.005, X.XXXX= ±0.001, ANGLES: ±0.5°	FLATNESS:	▱ 0.001" / INCH	
	ROUGHNESS:	125 √	

Franklin W. Olin College of Engineering

TITLE: JimmyQC_4001_Bicep-Anterior

MATERIAL: 3D PRINTED ABS

FINISH: AS PRINTED

NOTICE
THIS DRAWING IS FOR MECH-DESIGN USE AND CAN BE REDISTRIBUTED AND REUSED AT WILL.

	INIT.	DATE
ENGINEER	BQ	12/713
DRAWN	BQ	12/7/13
CHECKED	JB	12/13/13

SIZE	DWG. NO.	REV
B	4001A	K

SCALE: NONE | DO NOT SCALE PRINT | SHEET 1 OF 1

SEE JIMMYQC_4001_BICEP.SLDPRT FOR FULL GEOMETRY

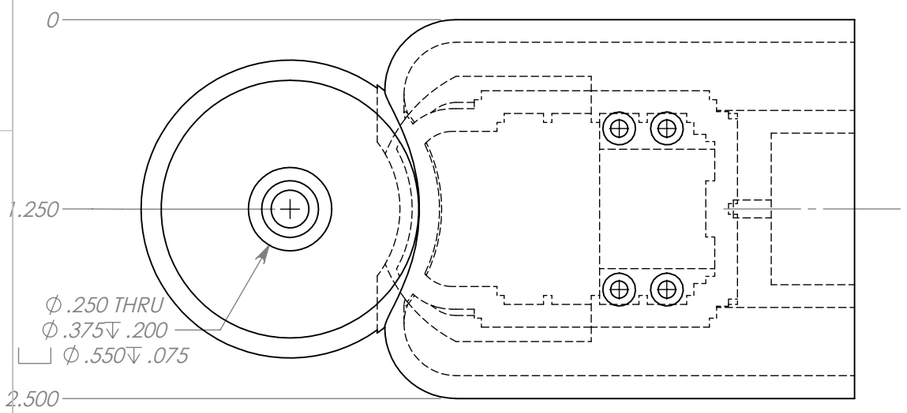

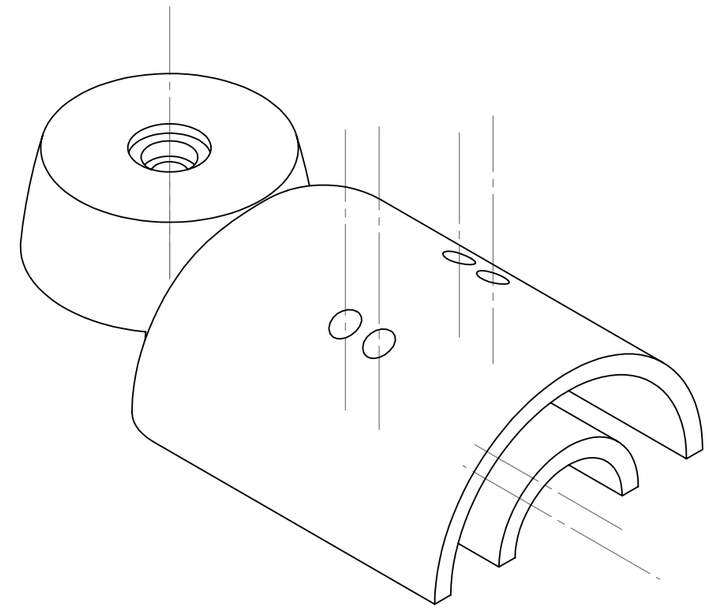

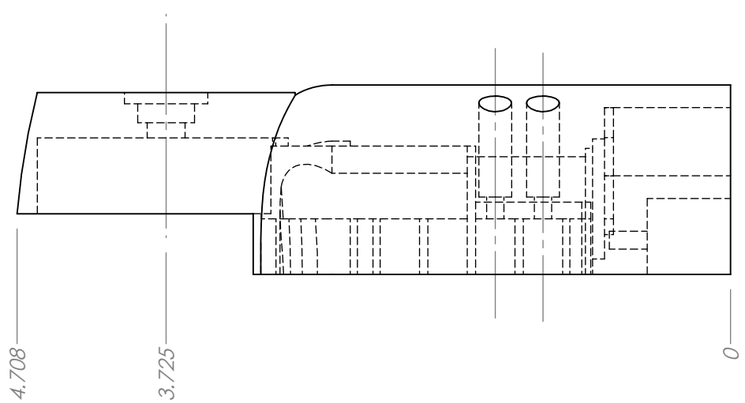

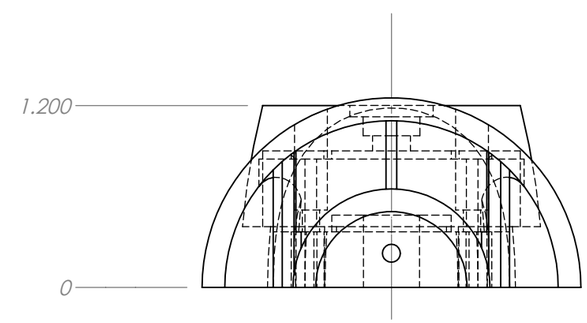

QTY: 2

DRILL OUT 0.25" HOLE

UNLESS OTHERWISE SPECIFIED:			
DIMENSIONING AND TOLERANCING PER ASME Y14.5M-1994.	PERPENDICULARITY:	⊥ 0.001" / INCH	
DIMENSIONS ARE IN INCHES.	CONCENTRICITY:	◎ 0.002" T.I.R.	
DE-BURR AND BREAK ALL SHARP EDGES .003 MIN.	PARALLELISM:	// 0.001" / INCH	
TOLERANCES ARE: X.XX = ±0.01, X.XXX = ±0.005, X.XXXX= ±0.001, ANGLES: ±0.5°	FLATNESS:	▱ 0.001" / INCH	
	ROUGHNESS:	125 √	

Franklin W. Olin College of Engineering

TITLE: JimmyQC_4001_Bicep-POSTERIOR

MATERIAL: 3D PRINTED ABS

FINISH: AS PRINTED

NOTICE
THIS DRAWING IS FOR MECH-DESIGN USE AND CAN BE REDISTRIBUTED AND REUSED AT WILL.

	INIT.	DATE
ENGINEER	BQ	12/713
DRAWN	BQ	12/7/13
CHECKED	JB	12/13/13

SIZE	DWG. NO.	REV
B	4001P	K

SCALE: NONE | DO NOT SCALE PRINT | SHEET 1 OF 1

SEE JIMMYQC_4003_FOREARM_GEAR.SLDPRT
FOR FULL GEOMETRY

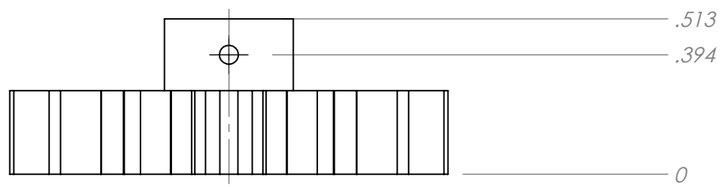

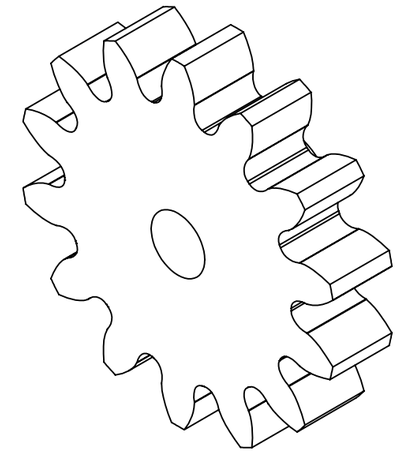

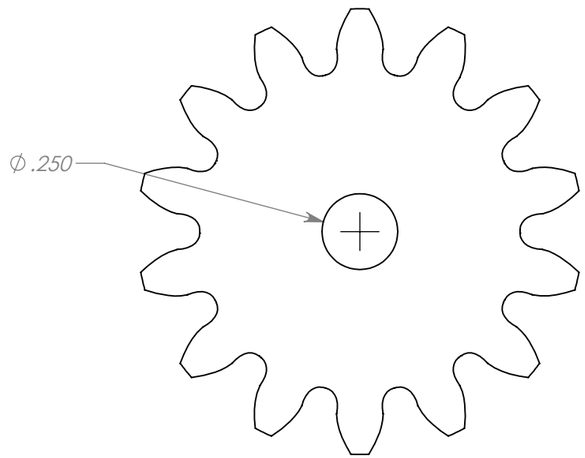

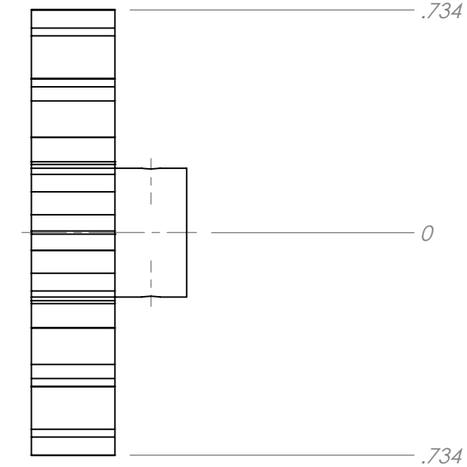

QTY: 2

DRILL CENTER HOLE TO 0.25"

UNLESS OTHERWISE SPECIFIED:		
DIMENSIONING AND TOLERANCING PER ASME Y14.5M-1994.	PERPENDICULARITY:	⊥ 0.001" / INCH
DIMENSIONS ARE IN INCHES.	CONCENTRICITY:	◎ 0.002" T.I.R.
DE-BURR AND BREAK ALL SHARP EDGES .003 MIN.	PARALLELISM:	// 0.001" / INCH
TOLERANCES ARE: X.XX = ±0.01, X.XXX = ±0.005, X.XXXX= ±0.001, ANGLES: ±0.5°	FLATNESS:	▱ 0.001" / INCH
	ROUGHNESS:	125

Franklin W. Olin College of Engineering

TITLE: JIMMYQC_4003_FOREARM_GEAR

MATERIAL: 3D PRINTED ABS

FINISH: AS PRINTED

NOTICE
THIS DRAWING IS FOR MECH-DESIGN USE AND CAN BE REDISTRIBUTED AND REUSED AT WILL.

	INIT.	DATE
ENGINEER	BQ	12/713
DRAWN	BQ	12/7/13
CHECKED	JB	12/13/13

SIZE	DWG. NO.	REV
B	4003	F
SCALE: 2:1	DO NOT SCALE PRINT	SHEET 1 OF 1

SEE JIMMYQC_4004_ELBOW_PIN.SLDPRT FOR FULL GEOMETRY

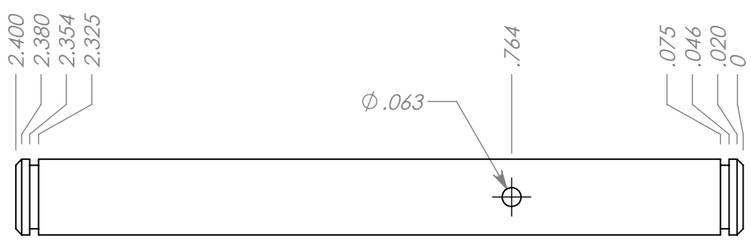

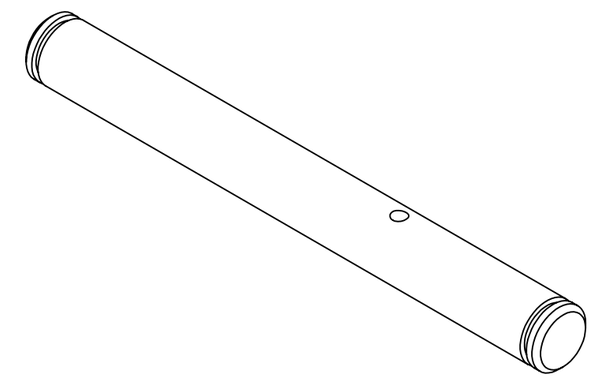

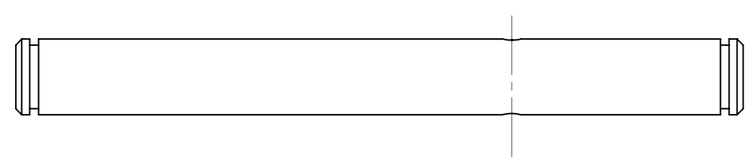

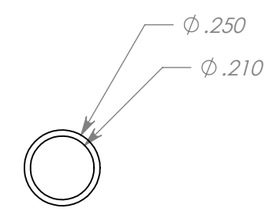

QTY: 2

UNLESS OTHERWISE SPECIFIED:			
DIMENSIONING AND TOLERANCING PER ASME Y14.5M-1994.	PERPENDICULARITY:	⊥ 0.001" / INCH	
DIMENSIONS ARE IN INCHES.	CONCENTRICITY:	◎ 0.002" T.I.R.	
DE-BURR AND BREAK ALL SHARP EDGES .003 MIN.	PARALLELISM:	// 0.001" / INCH	
TOLERANCES ARE: X.XX = ±0.01, X.XXX = ±0.005, X.XXXX= ±0.001, ANGLES: ±0.5°	FLATNESS:	▱ 0.001" / INCH	
	ROUGHNESS:	125 √	

Franklin W. Olin College of Engineering

TITLE: JIMMYQC_4004_Elbow_Pin

MATERIAL: STEEL

FINISH: STOCK

NOTICE
THIS DRAWING IS FOR MECH-DESIGN USE AND CAN BE REDISTRIBUTED AND REUSED AT WILL.

	INIT.	DATE
ENGINEER	BQ	12/713
DRAWN	BQ	12/7/13
CHECKED	JB	12/13/13

SIZE	DWG. NO.	REV
B	4004	A
SCALE: 2:1	DO NOT SCALE PRINT	SHEET 1 OF 1

SEE JIMMYQC_4005_FOREARM_AND_HAND.SLDPRT
FOR FULL GEOMETRY

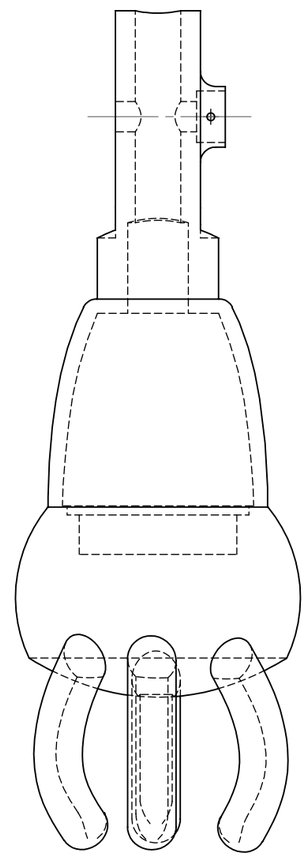

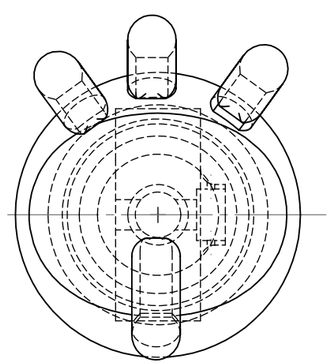

DRILL OUT 0.25" HOLE

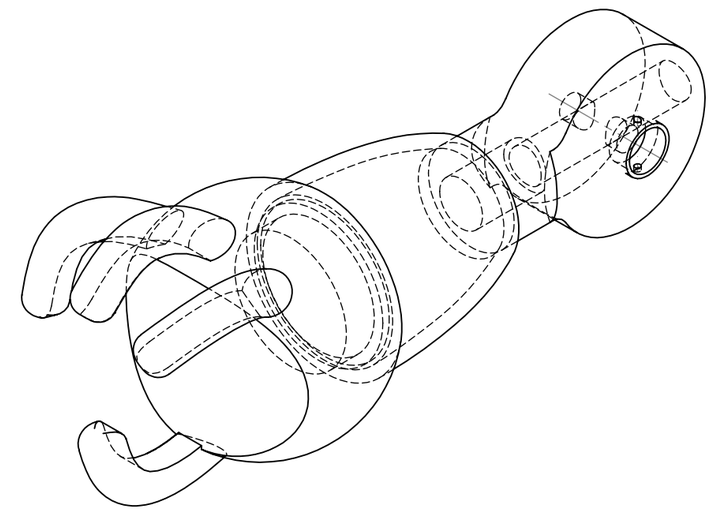

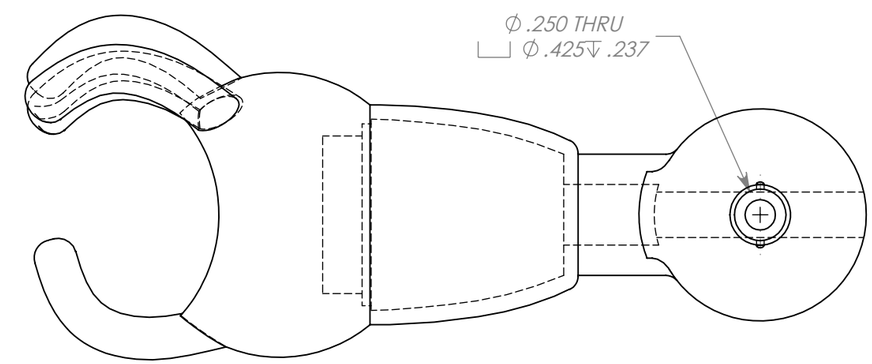

QTY: 2

UNLESS OTHERWISE SPECIFIED:			
DIMENSIONING AND TOLERANCING PER ASME Y14.5M-1994.	PERPENDICULARITY:	⊥ 0.001" / INCH	
DIMENSIONS ARE IN INCHES.	CONCENTRICITY:	◎ 0.002" T.I.R.	
DE-BURR AND BREAK ALL SHARP EDGES .003 MIN.	PARALLELISM:	// 0.001" / INCH	
TOLERANCES ARE: X.XX = ±0.01, X.XXX = ±0.005, X.XXXX= ±0.001, ANGLES: ±0.5°	FLATNESS:	▱ 0.001" / INCH	
	ROUGHNESS:	125 √	

Franklin W. Olin College of Engineering

TITLE: JIMMYQC_4005_FOREARM_AND_HAND

MATERIAL: 3D PRINTED ABS

FINISH: AS PRINTED

NOTICE
THIS DRAWING IS FOR MECH-DESIGN USE AND CAN BE REDISTRIBUTED AND REUSED AT WILL.

	INIT.	DATE
ENGINEER	BQ	12/713
DRAWN	BQ	12/7/13
CHECKED		

SIZE: B | DWG. NO.: 4005 | REV: A

SCALE: NONE | DO NOT SCALE PRINT | SHEET 1 OF 1

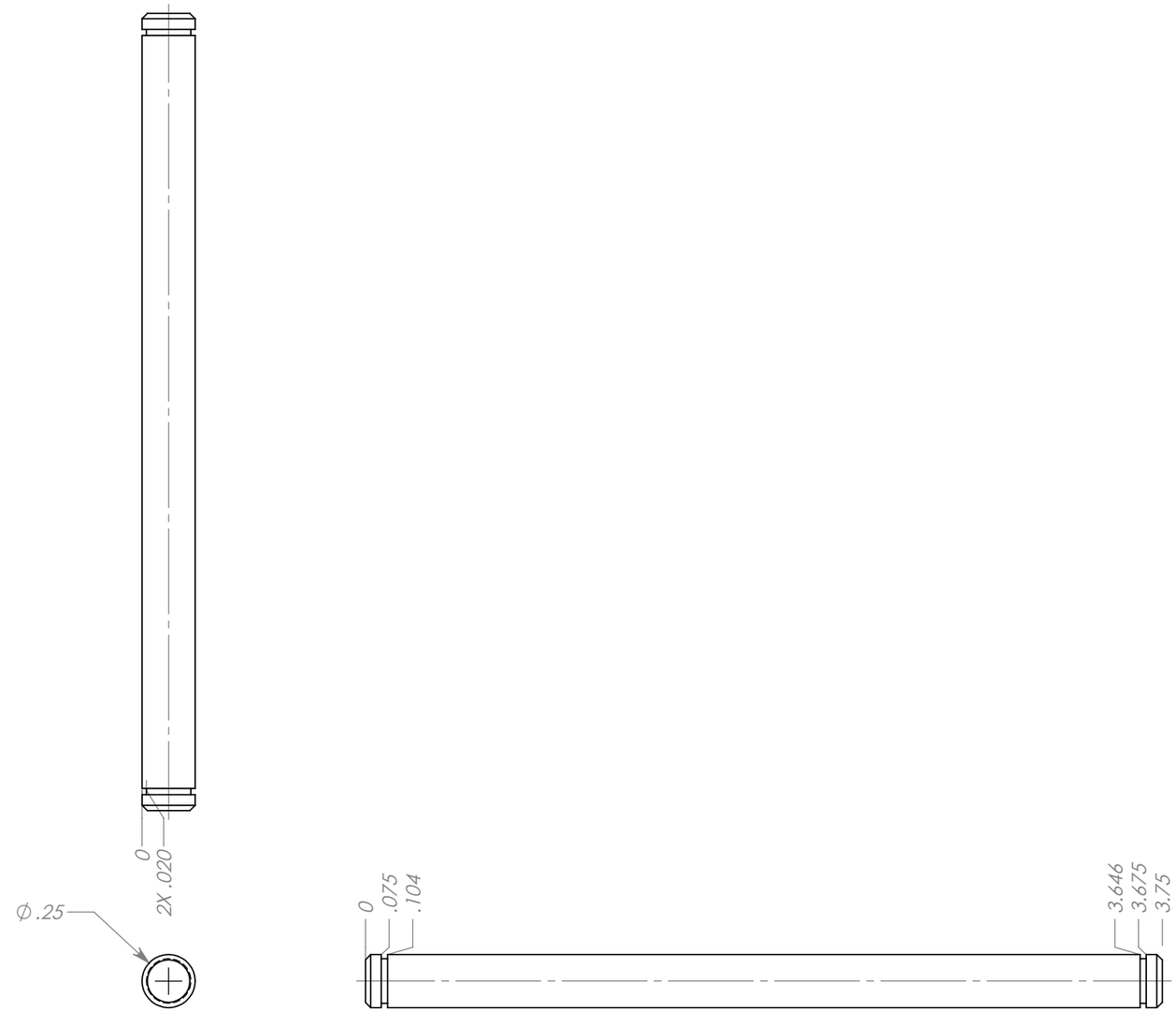

QTY: 1

UNLESS OTHERWISE SPECIFIED:

DIMENSIONING AND TOLERANCING PER ASME Y14.5M-1994.	PERPENDICULARITY:	⊥	0.001" / INCH
DIMENSIONS ARE IN INCHES.	CONCENTRICITY:	◎	0.002" T.I.R.
DE-BURR AND BREAK ALL SHARP EDGES .003 MIN.	PARALLELISM:	//	0.001" / INCH
TOLERANCES ARE: X.XX = ±0.01, X.XXX = ±0.005, X.XXXX = ±0.001, ANGLES: ±0.5°	FLATNESS:	▱	0.001" / INCH
	ROUGHNESS:		125

Franklin W. Olin College of Engineering

TITLE: **SHAFT ABOUT WHICH MOTOR MOUNTS ROTATE**

MATERIAL: **STEEL**

FINISH: **STOCK**

NOTICE
THIS DRAWING IS FOR MECH-DESIGN USE AND CAN BE REDISTRIBUTED AND REUSED AT WILL.

	INIT.	DATE
ENGINEER	BAR	12/01/13
DRAWN	BAR	12/11/13
CHECKED	JB	12/13/13

SIZE: **B** | DWG. NO.: **JimmyQC_5002_Shoulder_Torso_Shaft** | REV: **B**

SCALE: 3:2 | DO NOT SCALE PRINT | SHEET 1 OF 1

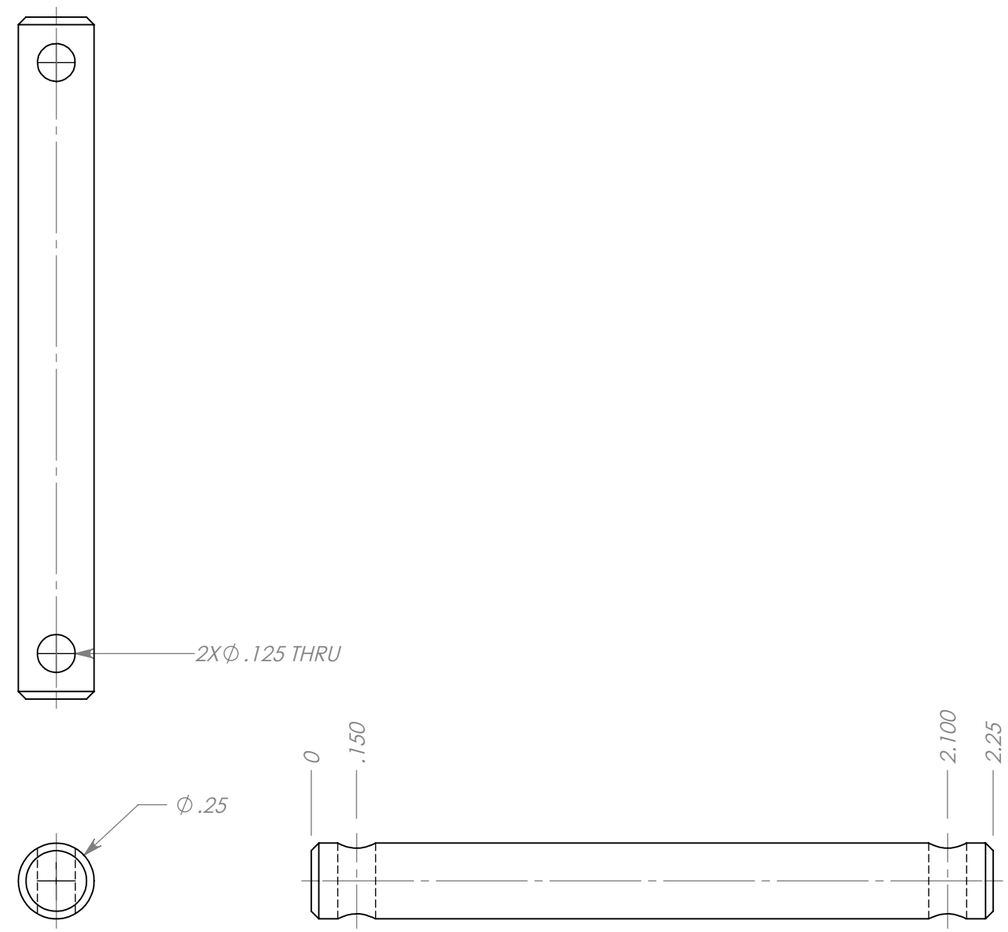

QTY: 2

UNLESS OTHERWISE SPECIFIED:			
DIMENSIONING AND TOLERANCING PER ASME Y14.5M-1994.	PERPENDICULARITY:	⊥ 0.001" / INCH	
DIMENSIONS ARE IN INCHES.	CONCENTRICITY:	◎ 0.002" T.I.R.	
DE-BURR AND BREAK ALL SHARP EDGES .003 MIN.	PARALLELISM:	// 0.001" / INCH	
TOLERANCES ARE: X.XX = ±0.01, X.XXX = ±0.005, X.XXXX= ±0.001, ANGLES: ±0.5°	FLATNESS:	▱ 0.001" / INCH	
	ROUGHNESS:	125 √	

Franklin W. Olin College of Engineering

TITLE: SHAFT TO CONNECT MOTOR MOUNTS TO SHOULDER GIMBLE

MATERIAL: STEEL

FINISH: STOCK

NOTICE
THIS DRAWING IS FOR MECH-DESIGN USE AND CAN BE REDISTRIBUTED AND REUSED AT WILL.

	INIT.	DATE
ENGINEER	BAR	12/01/13
DRAWN	BAR	12/11/13
CHECKED	JB	12/13/13

SIZE: B | DWG. NO.: JimmyQC_5003_Shoulder_Arm_Shaft | REV: A

SCALE: 2:1 | DO NOT SCALE PRINT | SHEET 1 OF 1

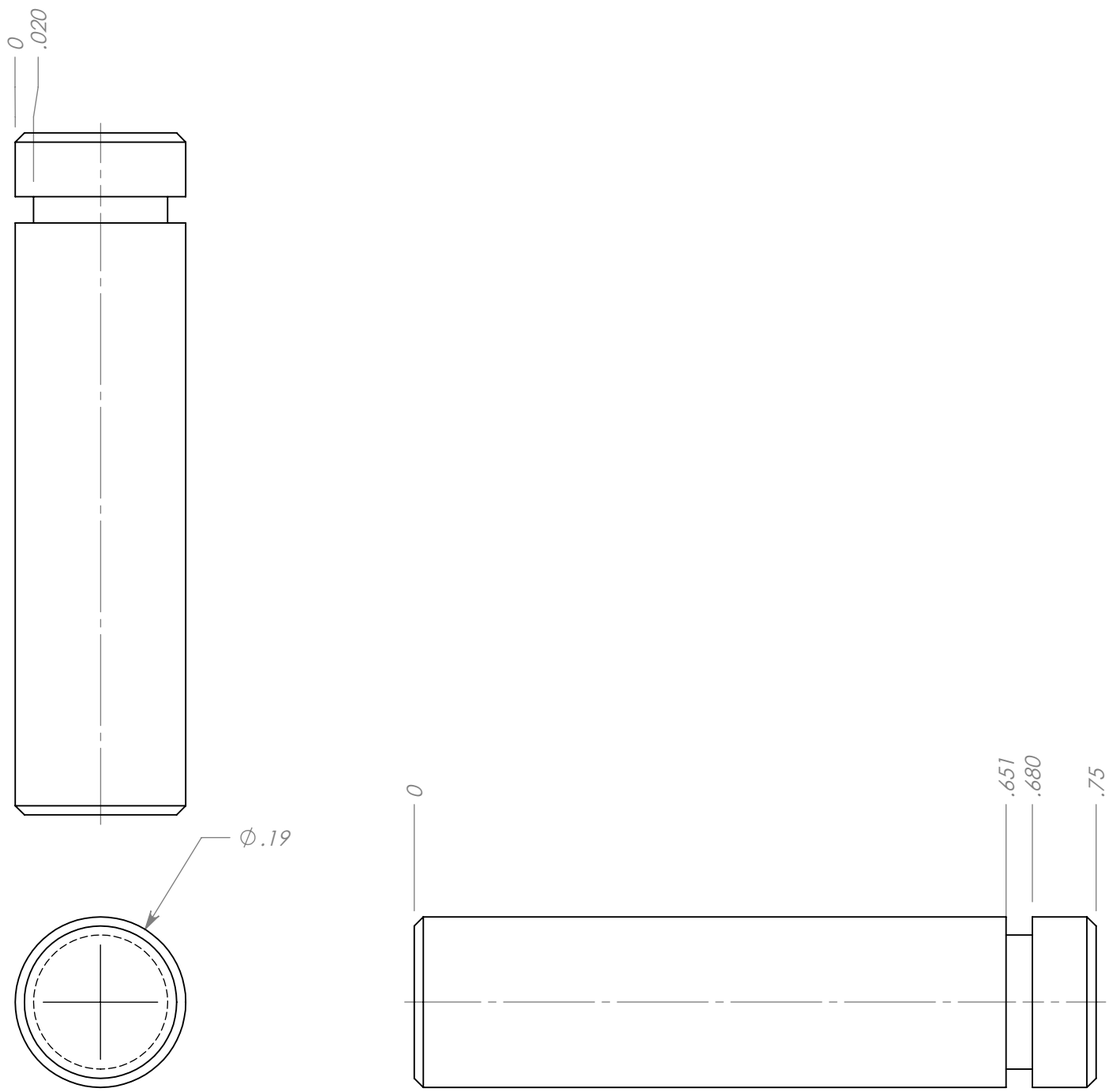

QTY: 2

UNLESS OTHERWISE SPECIFIED:			
DIMENSIONING AND TOLERANCING PER ASME Y14.5M-1994.	PERPENDICULARITY:	⊥ 0.001" / INCH	
DIMENSIONS ARE IN INCHES.	CONCENTRICITY:	◎ 0.002" T.I.R.	
DE-BURR AND BREAK ALL SHARP EDGES .003 MIN.	PARALLELISM:	// 0.001" / INCH	
TOLERANCES ARE: X.XX = ±0.01, X.XXX = ±0.005, X.XXXX= ±0.001, ANGLES: ±0.5°	FLATNESS:	▱ 0.001" / INCH	
	ROUGHNESS:	125 √	

Franklin W. Olin College of Engineering

TITLE:

SHAFT FOR CONNECTING MOTOR MOUNT TO LONG LINKAGE

MATERIAL: **STEEL**

FINISH: **STOCK**

NOTICE
THIS DRAWING IS FOR MECH-DESIGN USE AND CAN BE REDISTRIBUTED AND REUSED AT WILL.

	INIT.	DATE
ENGINEER	BAR	12/01/13
DRAWN	BAR	12/11/13
CHECKED	JB	12/13/13

SIZE	DWG. NO.	REV
B	JimmyQC_5004_Shoulder_Linkage_Shaft	C

SCALE: 6:1 | DO NOT SCALE PRINT | SHEET 1 OF 1

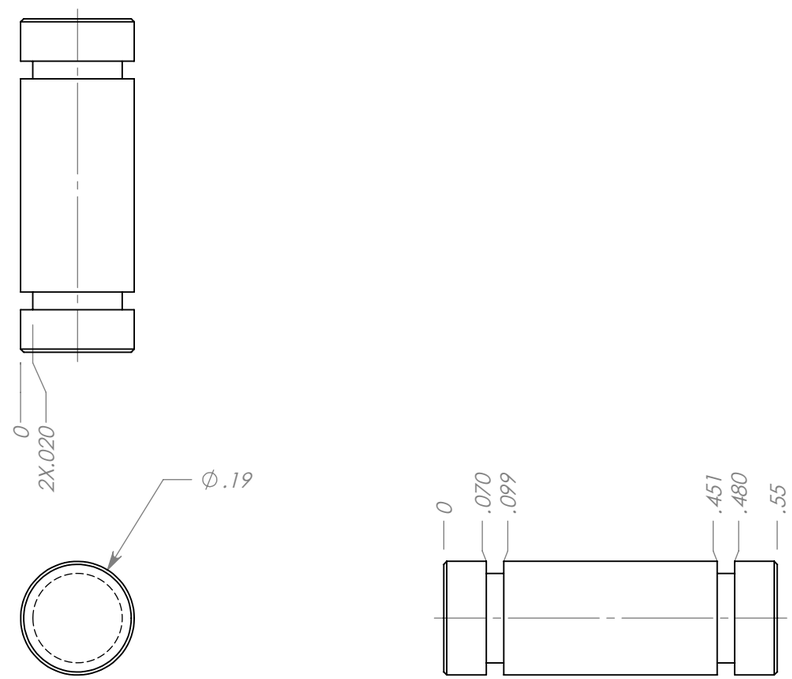

QTY:2

UNLESS OTHERWISE SPECIFIED:			
DIMENSIONING AND TOLERANCING PER ASME Y14.5M-1994.	PERPENDICULARITY:	⊥ 0.001" / INCH	
DIMENSIONS ARE IN INCHES.	CONCENTRICITY:	◎ 0.002" T.I.R.	
DE-BURR AND BREAK ALL SHARP EDGES .003 MIN.	PARALLELISM:	// 0.001" / INCH	
TOLERANCES ARE: X.XX = ±0.01, X.XXX = ±0.005, X.XXXX = ±0.001, ANGLES: ±0.5°	FLATNESS:	▱ 0.001" / INCH	
	ROUGHNESS:	125	

Franklin W. Olin College of Engineering

TITLE:

SHAFT FOR CONNECTING LONG AND SHORT LINKAGES

MATERIAL: **STEEL**

FINISH: **STOCK**

NOTICE

THIS DRAWING IS FOR MECH-DESIGN USE AND CAN BE REDISTRIBUTED AND REUSED AT WILL.

	INIT.	DATE
ENGINEER	BAR	12/01/13
DRAWN	BAR	12/11/13
CHECKED	JB	12/13/13

SIZE	DWG. NO.	REV
B	JimmyQC_5005_Linkage_Linkage_Shaft	E

SCALE: 4:1 | DO NOT SCALE PRINT | SHEET 1 OF 1

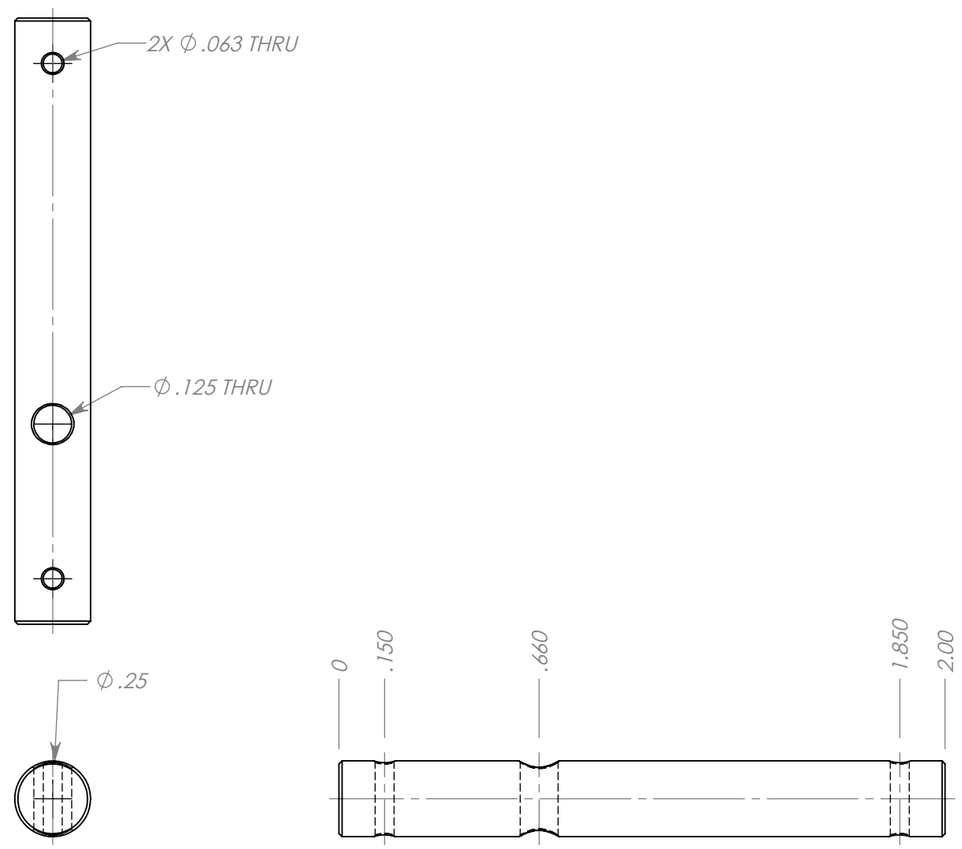

QTY: 1

UNLESS OTHERWISE SPECIFIED:			
DIMENSIONING AND TOLERANCING PER ASME Y14.5M-1994.	PERPENDICULARITY:	⊥ 0.001" / INCH	
DIMENSIONS ARE IN INCHES.	CONCENTRICITY:	◎ 0.002" T.I.R.	
DE-BURR AND BREAK ALL SHARP EDGES .003 MIN.	PARALLELISM:	// 0.001" / INCH	
TOLERANCES ARE: X.XX = ±0.01, X.XXX = ±0.005, X.XXXX= ±0.001, ANGLES: ±0.5°	FLATNESS:	▱ 0.001" / INCH	
	ROUGHNESS:	125 √	

Franklin W. Olin College of Engineering

TITLE: **SHAFT TO ATTACH SHORT LINKAGES AND PULLEY**

MATERIAL: **STEEL**

FINISH: **STOCK**

NOTICE
THIS DRAWING IS FOR MECH-DESIGN USE AND CAN BE REDISTRIBUTED AND REUSED AT WILL.

	INIT.	DATE
ENGINEER	BAR	12/01/13
DRAWN	BAR	12/11/13
CHECKED	JB	12/13/13

SIZE: **B** | DWG. NO.: **JimmyQC_5006_Shoulder_Drive_Shaft** | REV: **H**

SCALE: 2:1 | DO NOT SCALE PRINT | SHEET 1 OF 1

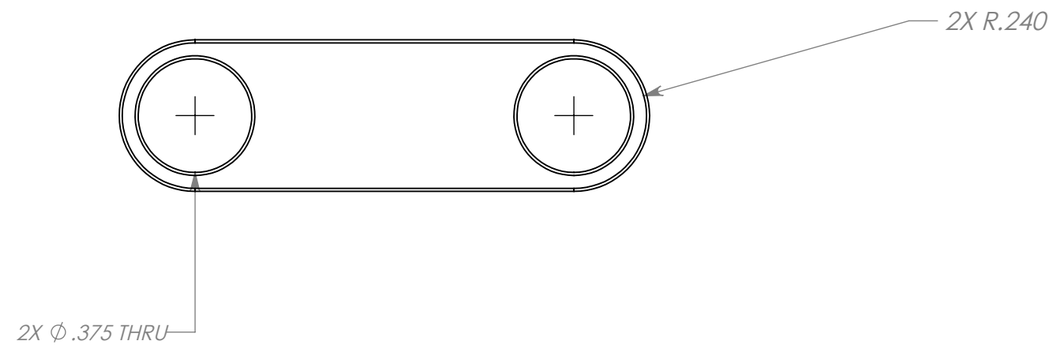

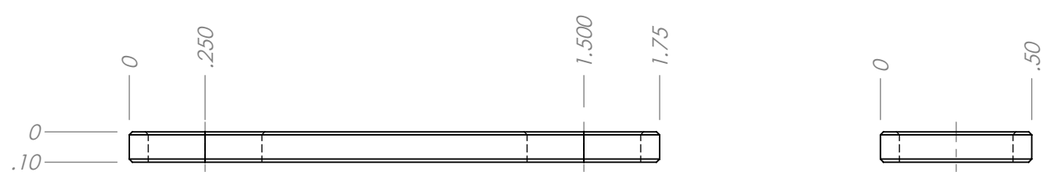

QTY: 2

UNLESS OTHERWISE SPECIFIED:		
DIMENSIONING AND TOLERANCING PER ASME Y14.5M-1994.	PERPENDICULARITY:	⊥ 0.001" / INCH
DIMENSIONS ARE IN INCHES.	CONCENTRICITY:	◎ 0.002" T.I.R.
DE-BURR AND BREAK ALL SHARP EDGES .003 MIN.	PARALLELISM:	// 0.001" / INCH
TOLERANCES ARE: X.XX = ±0.01, X.XXX = ±0.005, X.XXXX= ±0.001, ANGLES: ±0.5°	FLATNESS:	▱ 0.001" / INCH
	ROUGHNESS:	125 √

Franklin W. Olin College of Engineering

TITLE: **LONG LINKAGES**

MATERIAL: **STEEL**

FINISH: **MACHINED**

NOTICE
THIS DRAWING IS FOR MECH-DESIGN USE AND CAN BE REDISTRIBUTED AND REUSED AT WILL.

	INIT.	DATE
ENGINEER	BAR	12/01/13
DRAWN	BAR	12/11/13
CHECKED	JB	12/13/13

SIZE: **B** | DWG. NO. **JimmyQC_5007_Long_Shoulder_Linkage** | REV **D**

SCALE: 2:1 | DO NOT SCALE PRINT | SHEET 1 OF 1

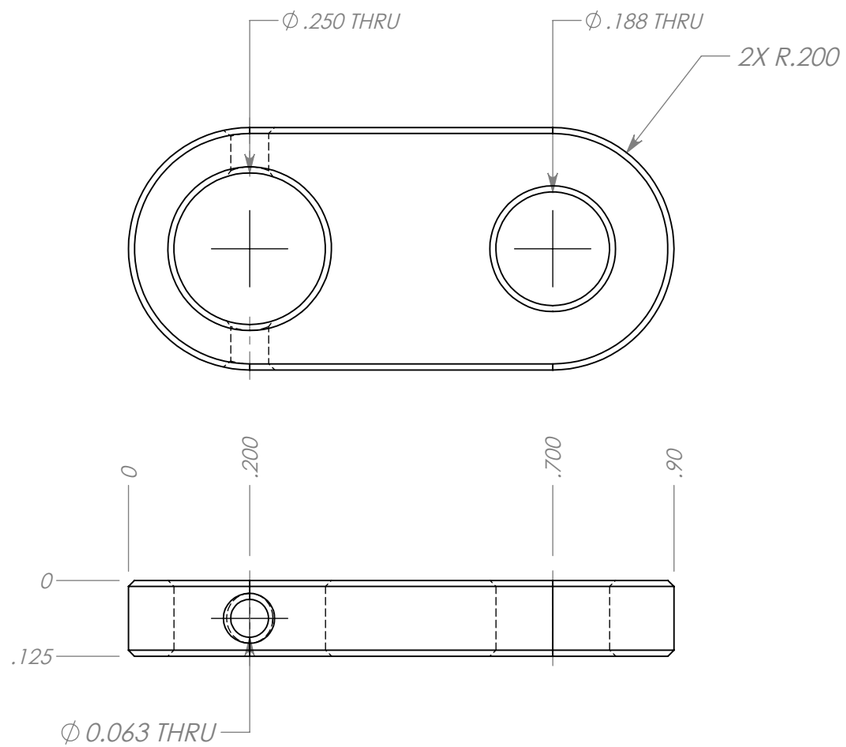

QTY: 2

UNLESS OTHERWISE SPECIFIED:			
DIMENSIONING AND TOLERANCING PER ASME Y14.5M-1994.	PERPENDICULARITY:	⊥ 0.001" / INCH	
DIMENSIONS ARE IN INCHES.	CONCENTRICITY:	◎ 0.002" T.I.R.	
DE-BURR AND BREAK ALL SHARP EDGES .003 MIN.	PARALLELISM:	// 0.001" / INCH	
TOLERANCES ARE: X.XX = ±0.01, X.XXX = ±0.005, X.XXXX= ±0.001, ANGLES: ±0.5°	FLATNESS:	▱ 0.001" / INCH	
	ROUGHNESS:	125	

Franklin W. Olin College of Engineering

TITLE: **SHORT LINKAGES**

MATERIAL: **STEEL**

FINISH: **MACHINED**

NOTICE
THIS DRAWING IS FOR MECH-DESIGN USE AND CAN BE REDISTRIBUTED AND REUSED AT WILL.

	INIT.	DATE
ENGINEER	BAR	12/01/13
DRAWN	BAR	12/11/13
CHECKED	JB	12/13/13

SIZE: **B** | DWG. NO.: **JimmyQC_5008_Short_Shoulder_Linkage** | REV: **F**

SCALE: 4:1 | DO NOT SCALE PRINT | SHEET 1 OF 1

ITEM NO.	SW-File Name(File Name)	DESCRIPTION	QTY.
1	JimmyQC_6001_Neck	Neck	1
2	JimmyQC_6100_MotorASM	Motor and shaft to head	1
3	JimmyQC_6200_ChinASM	Chin	1
4	JimmyQC_6300_HeadClamshellASM	Head assembly	1
5	JimmyQC_9011_SpringPin_0.125D_1.75L	Spring pin	1
6	JimmyQC_9100_AX12_MountingFasteners_LongASM	M2x12 screws with washer and nut	8
7	JimmyQC_9010_SpringPin_0.0625D_1L	Spring pin	2
8	JimmyQC_9019_0.25Shaft_BallBearing_Flanged	0.25" shaft flanged ball bearing	1

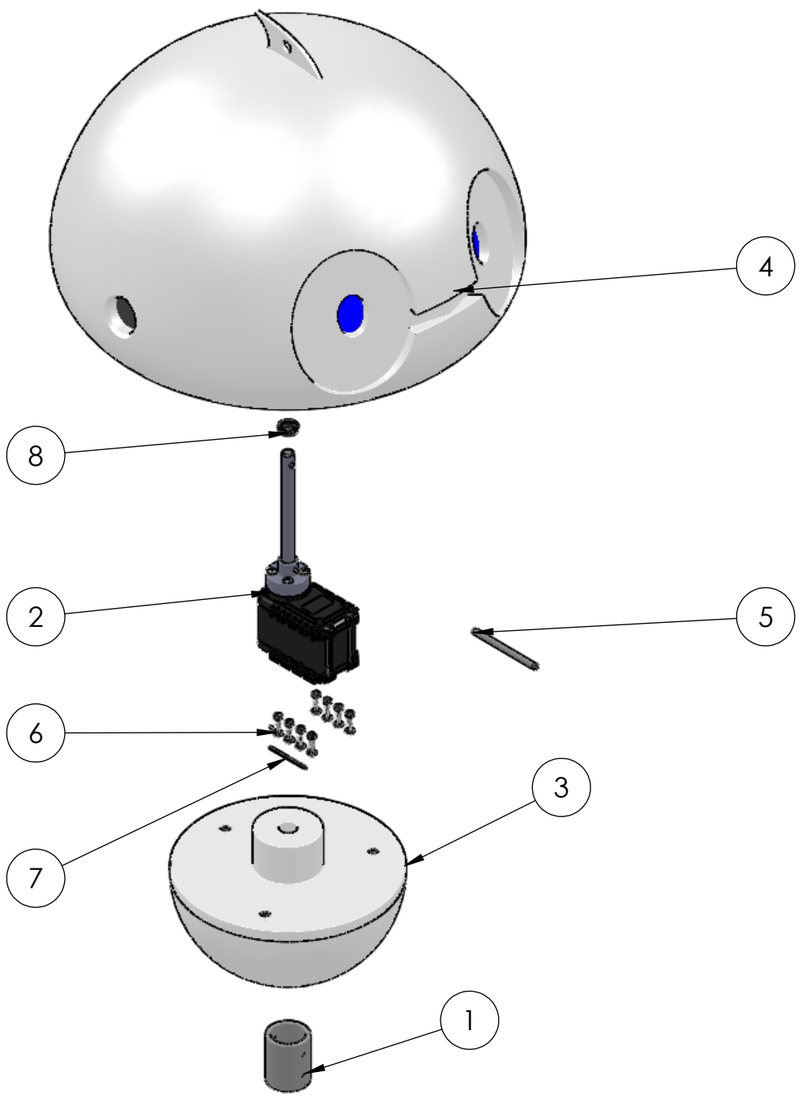

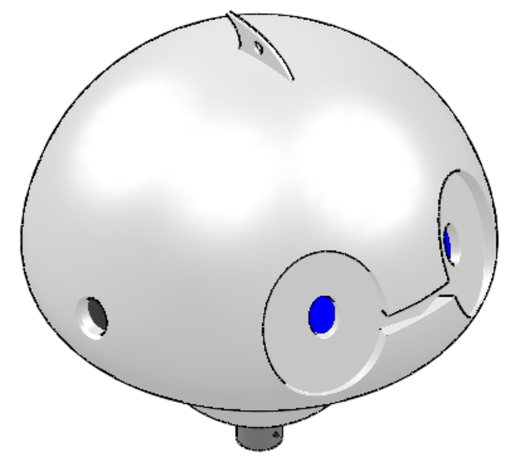

QTY:1

UNLESS OTHERWISE SPECIFIED:

DIMENSIONING AND TOLERANCING PER ASME Y14.5M-1994.
DIMENSIONS ARE IN INCHES.
DE-BURR AND BREAK ALL SHARP EDGES .003 MIN.

TOLERANCES ARE: X.XX = ±0.01, X.XXX = ±0.005, X.XXXX= ±0.001, ANGLES: ±0.5°

PERPENDICULARITY: ⊥ 0.001" / INCH
CONCENTRICITY: ◎ 0.002" T.I.R.
PARALLELISM: // 0.001" / INCH
FLATNESS: ▱ 0.001" / INCH
ROUGHNESS: 125

NOTICE
THIS DRAWING IS FOR MECH-DESIGN USE AND CAN BE REDISTRIBUTED AND REUSED AT WILL.

	INIT.	DATE
ENGINEER	JLM	12/13/13
DRAWN	JLM	12/13/13
CHECKED	JB	12/13/13

Franklin W. Olin College of Engineering

TITLE: **HEAD ASSEMBLY**

SIZE: B | DWG. NO.: JimmyQC_6000_HeadASM | REV: T

SCALE: 1:3 | DO NOT SCALE PRINT | SHEET 1 OF 1

ITEM NO.	SW-File Name(File Name)	DESCRIPTION	QTY.
1	JimmyQC_8100_AX12	ROBOTIS AX-12 MOTOR	1
2	JimmyQC_6101_MotorAttachment	Hub-shaft interface	1
3	JimmyQC_6102_MotorShaft	Driving shaft	1
4	JimmyQC_9100_AX12_MountingFasteners_LongASM	M2x12 screws with washer and nut	4
5	JimmyQC_9020_SpringPin_0.0625D_0.5L	1/16"D spring pin, 0.5"L	1

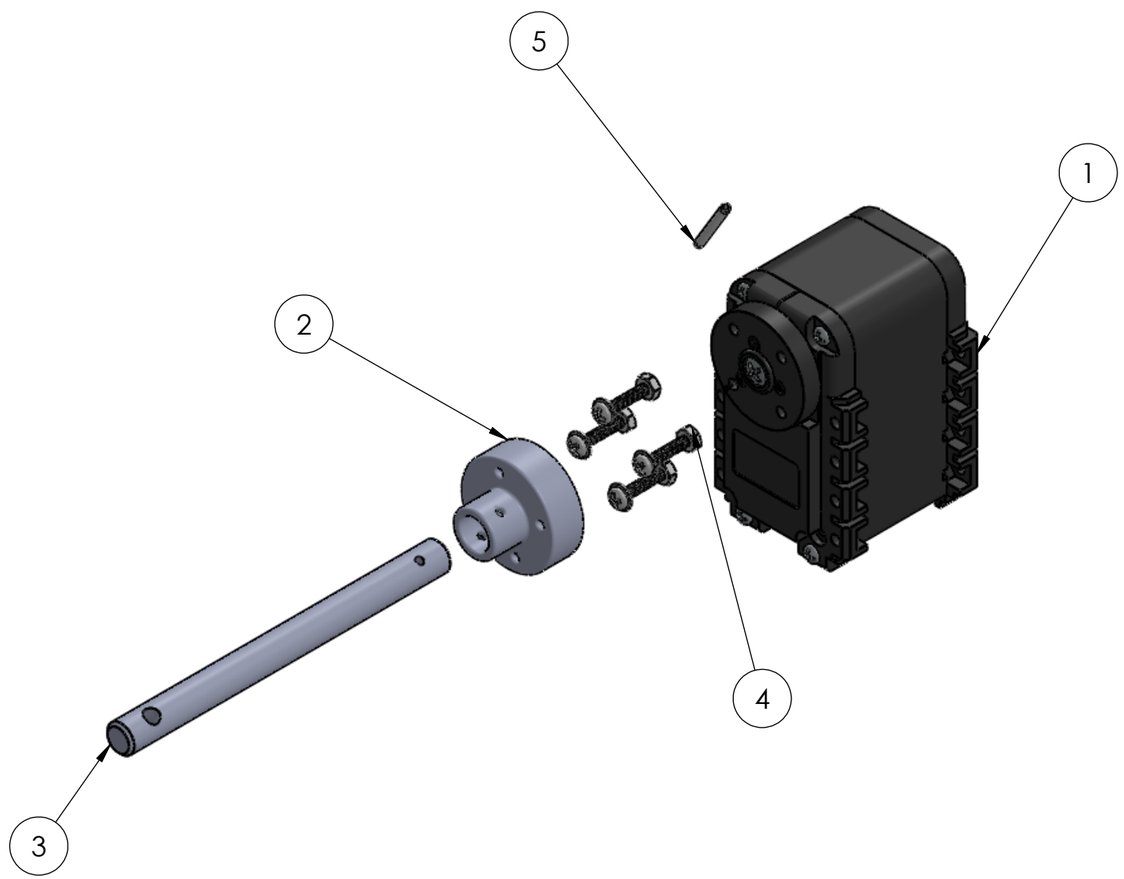

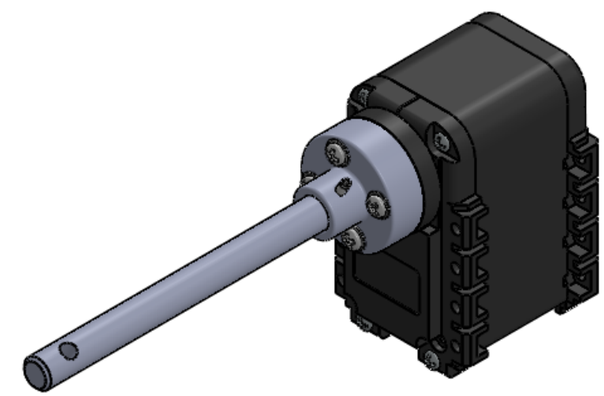

QTY:1

UNLESS OTHERWISE SPECIFIED:

DIMENSIONING AND TOLERANCING PER ASME Y14.5M-1994.	PERPENDICULARITY:	⊥ 0.001" / INCH
DIMENSIONS ARE IN INCHES.	CONCENTRICITY:	◎ 0.002" T.I.R.
DE-BURR AND BREAK ALL SHARP EDGES .003 MIN.	PARALLELISM:	// 0.001" / INCH
TOLERANCES ARE: X.XX = ±0.01, X.XXX = ±0.005, X.XXXX= ±0.001, ANGLES: ±0.5°	FLATNESS:	▱ 0.001" / INCH
	ROUGHNESS:	125

NOTICE

THIS DRAWING IS FOR MECH-DESIGN USE AND CAN BE REDISTRIBUTED AND REUSED AT WILL.

	INIT.	DATE
ENGINEER	JLM	12/13/13
DRAWN	JLM	12/13/13
CHECKED	JB	12/13/13

Franklin W. Olin College of Engineering

TITLE: **Motor Assembly**

SIZE: B | DWG. NO.: JimmyQC_6100_MotorASM | REV: H

SCALE: NONE | DO NOT SCALE PRINT | SHEET 1 OF 1

ITEM NO.	SW-File Name(File Name)	DESCRIPTION	QTY.
1	JimmyQC_6201_ChinTop	Chin top	1
2	JimmyQC_6202_ChinBottom	Bottom piece of chin	1
3	JimmyQC_9021_2_56_Threaded_Inserts	2-56 Threaded Inserts	6
4	JimmyQC_9009_2-56_0.5_screw	2-56x1/2" screw	3

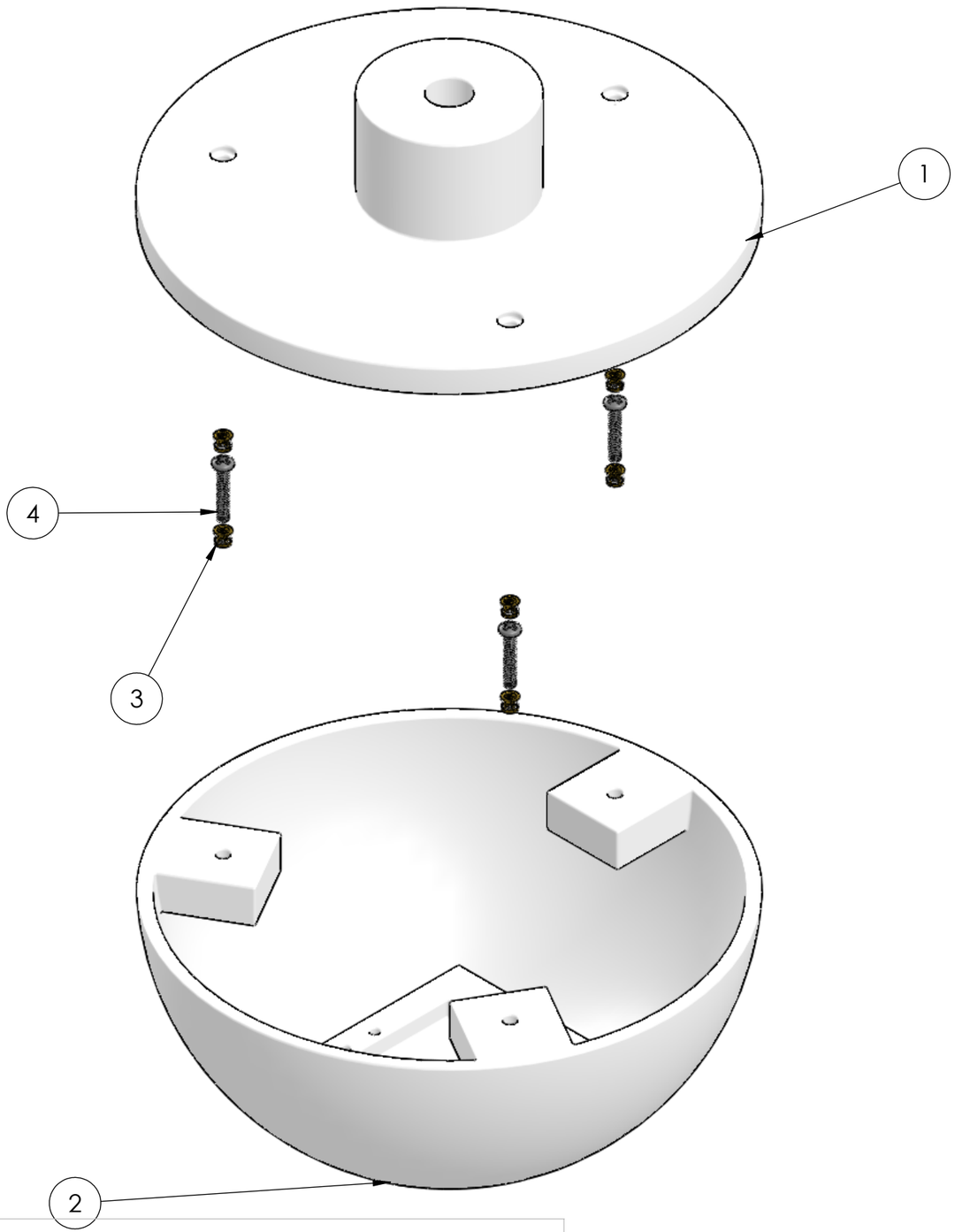

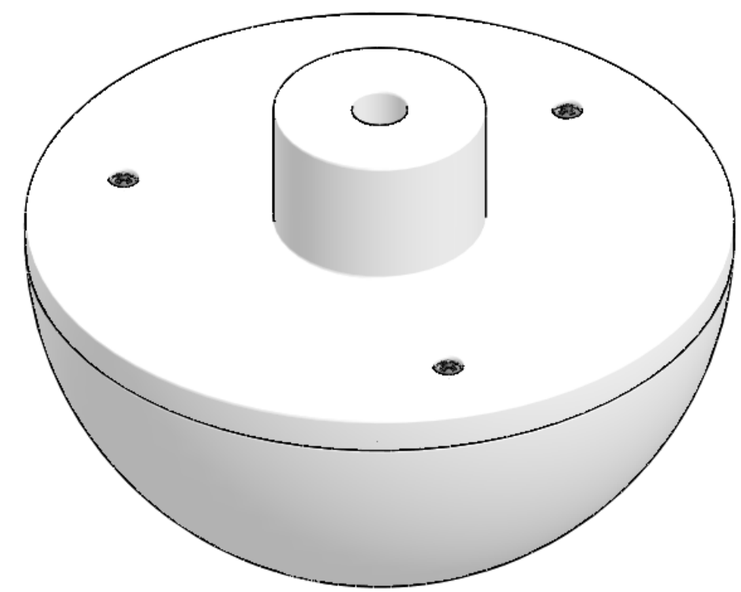

QTY:1

UNLESS OTHERWISE SPECIFIED:

DIMENSIONING AND TOLERANCING PER ASME Y14.5M-1994.	PERPENDICULARITY:	⊥ 0.001" / INCH
DIMENSIONS ARE IN INCHES.	CONCENTRICITY:	◎ 0.002" T.I.R.
DE-BURR AND BREAK ALL SHARP EDGES .003 MIN.	PARALLELISM:	// 0.001" / INCH
TOLERANCES ARE: X.XX = ±0.01, X.XXX = ±0.005, X.XXXX= ±0.001, ANGLES: ±0.5°	FLATNESS:	▱ 0.001" / INCH
	ROUGHNESS:	125

NOTICE
THIS DRAWING IS FOR MECH-DESIGN USE AND CAN BE REDISTRIBUTED AND REUSED AT WILL.

	INIT.	DATE
ENGINEER	JLM	12/13/13
DRAWN	JLM	12/13/13
CHECKED	JB	12/13/13

ge of Engineering

TITLE: **CHIN ASSEMBLY**

SIZE: B | DWG. NO.: JimmyQC_6200_ChinASM | REV: J

SCALE: NONE | DO NOT SCALE PRINT | SHEET 1 OF 1

ITEM NO.	SW-File Name(File Name)	DESCRIPTION	QTY.
1	JimmyQC_6302_HeadBottom	Bottom piece of head	1
2	JimmyQC_6301_HeadTop	Top piece of head	1
3	JimmyQC_9021_2_56_Threaded_Inserts	2-56 Threaded Inserts	6
4	JimmyQC_9009_2-56_0.5_screw	2-56x1/2" screw	3

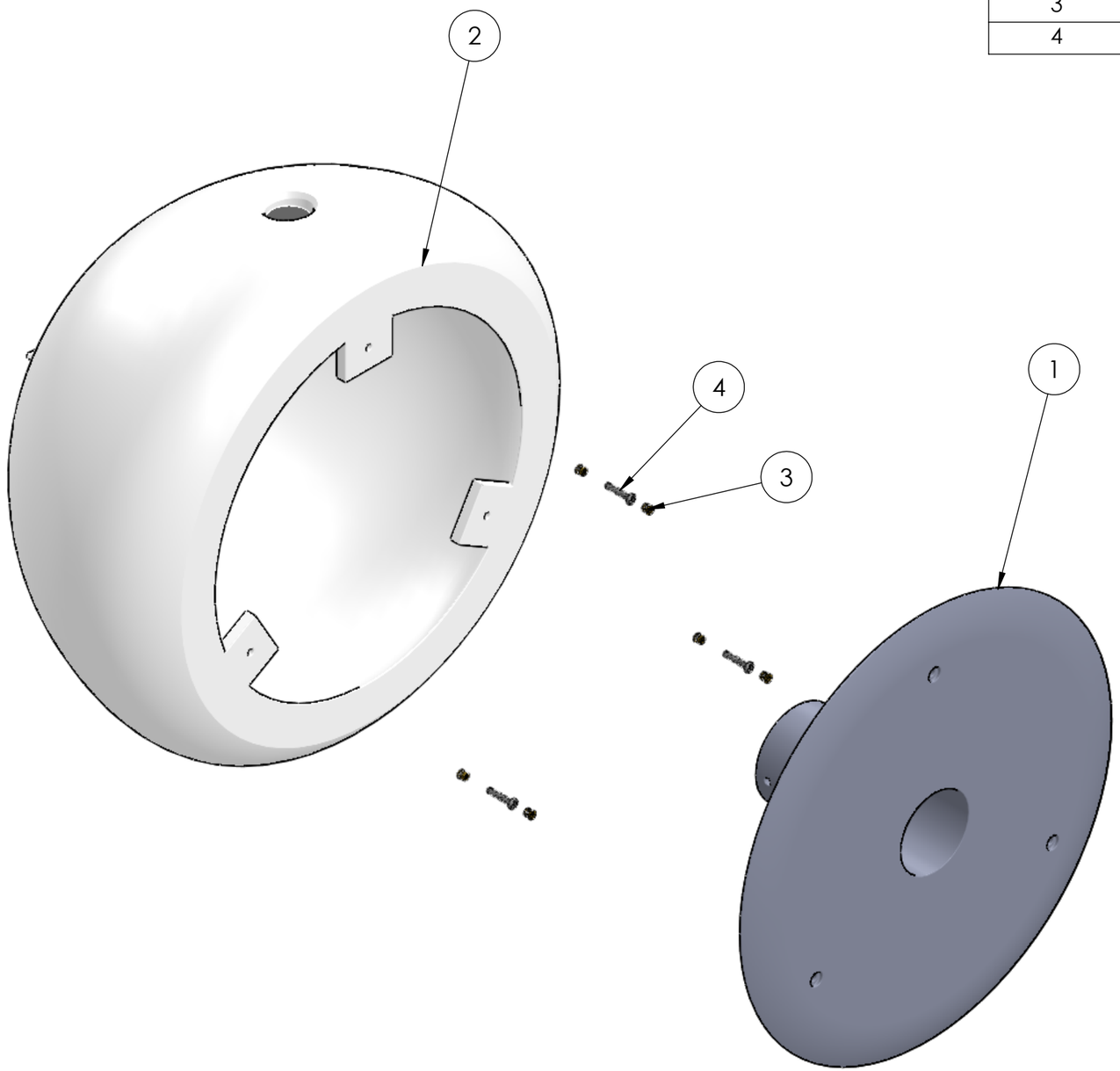

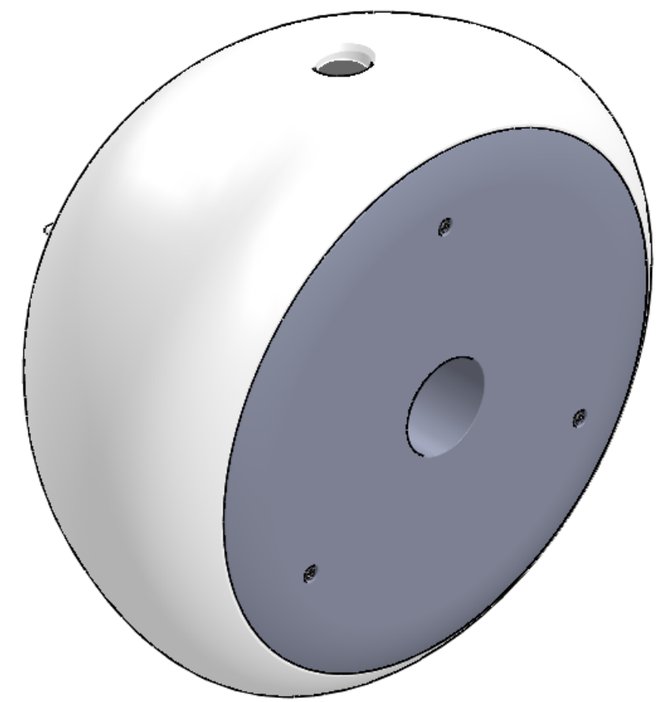

QTY:1

UNLESS OTHERWISE SPECIFIED:

DIMENSIONING AND TOLERANCING PER ASME Y14.5M-1994.	PERPENDICULARITY:	⊥	0.001" / INCH
DIMENSIONS ARE IN INCHES.	CONCENTRICITY:	◎	0.002" T.I.R.
DE-BURR AND BREAK ALL SHARP EDGES .003 MIN.	PARALLELISM:	//	0.001" / INCH
TOLERANCES ARE: X.XX = ±0.01, X.XXX = ±0.005, X.XXXX= ±0.001, ANGLES: ±0.5°	FLATNESS:	▱	0.001" / INCH
	ROUGHNESS:		125

College of Engineering

TITLE:

HEAD CLAMSHELL ASSEMBLY

NOTICE

THIS DRAWING IS FOR MECH-DESIGN USE AND CAN BE REDISTRIBUTED AND REUSED AT WILL.

	INIT.	DATE
ENGINEER	JLM	12/13/13
DRAWN	JLM	12/13/13
CHECKED	JB	12/13/13

SIZE	DWG. NO.	REV
B	JimmyQC_6300_HeadClamshellASM	E

SCALE: 1:2 | DO NOT SCALE PRINT | SHEET 1 OF 1

ITEM NO.	PART NAME	DESCRIPTION	QTY.
1	JimmyQC_9022_1_4_ID_washer	.25" ID Nylon Washer	8
2	JimmyQC_9014_0.25_RetainingRing	1/4" RETAINING RING	11
3	JimmyQC_9024_1_16_OD_pin	1/16" OD Spring Pin	2
4	JimmyQC_92373A178	1/8"x5/16" Spring Pin	1
5	jimmyQC_7008_COM_DriveLink	Long driven link of 4-bar COM shifting linkage	1
6	JimmyQC_7003_COM_LinkShaft	1/4 shaft for COM shifting 4-bar linkage	1
7	JimmyQC_7001_COM_LinkLong	Long link of 4-bar COM shifting linkage	3
8	JimmyQC_7002_COM_LinkShort	Short link of 4-bar COM shifting linkage	2
9	JimmyQC_7009_COM_DriveShaft	1/4" shaft for driving linkage	1
10	JimmyQC_7010_ShortShaft	1/4" shaft for suspending weight	4
11	JIMMYQC_8101	ROBOTIS AX-12 MOTOR HOUSING	1
12	JIMMYQC_8105	ROBOTIS AX-12 SERVO HORN	1
13	JIMMYQC_8106	ROBOTIS AX-12 RETAINING SCREW	1
14	JimmyQC_7006_COM_LargeGear	32T gear in COM gearbox	1
15	JimmyQC_7007_COM_SmallGear	36T gear in COM gearbox	1
16	JimmyQC_7011_ShortGearMount	Motor horn to gear connector	1
17	JimmyQC_9017_0.25_0.375_Sleve_Bearing	Bushing for 1/4 in shaft, 3/8 in long	4
18	JimmyQC_9006L_Torso	Left half of torso	1
19	JimmyQC_9006R_Torso	Right half of torso	1
20	JimmyQC_9013_AX12_MountingWasher	M2 washer	12
21	JimmyQC_9005_AX12_MountingNut	M2.5 NUT	12
22	JimmyQC_9012_AX12_MountingScrew_Long	M2x12mm	12

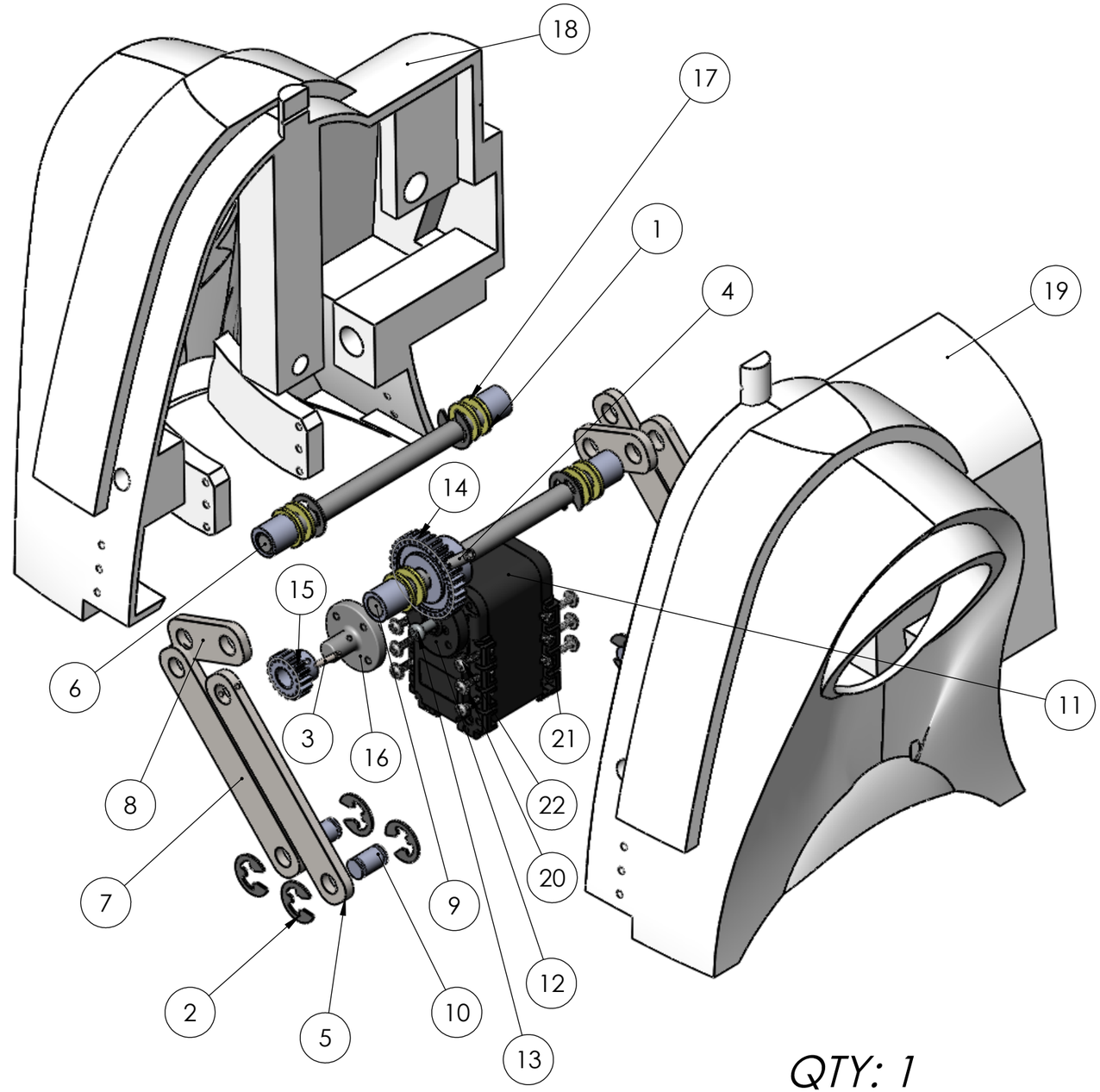

QTY: 1

UNLESS OTHERWISE SPECIFIED:

DIMENSIONING AND TOLERANCING PER ASME Y14.5M-1994.
DIMENSIONS ARE IN INCHES.
DE-BURR AND BREAK ALL SHARP EDGES .003 MIN.
TOLERANCES ARE: X.XX = ±0.01, X.XXX = ±0.005, X.XXXX = ±0.001, ANGLES: ±0.5°

PERPENDICULARITY: 0.001" / INCH
CONCENTRICITY: 0.002" T.I.R.
PARALLELISM: 0.001" / INCH
FLATNESS: 0.001" / INCH
ROUGHNESS: 125

NOTICE
THIS DRAWING IS FOR MECH-DESIGN USE AND CAN BE REDISTRIBUTED AND REUSED AT WILL.

	INIT.	DATE
ENGINEER	CF	12/12/13
DRAWN	CF	12/13/13
CHECKED	JB	12/13/13

TITLE: FULL TORSO ASSEMBLY

SIZE: B | DWG. NO.: JimmyQC_7000_TorsoASM | REV: R

SCALE: 2:3 | DO NOT SCALE PRINT | SHEET 1 OF 1

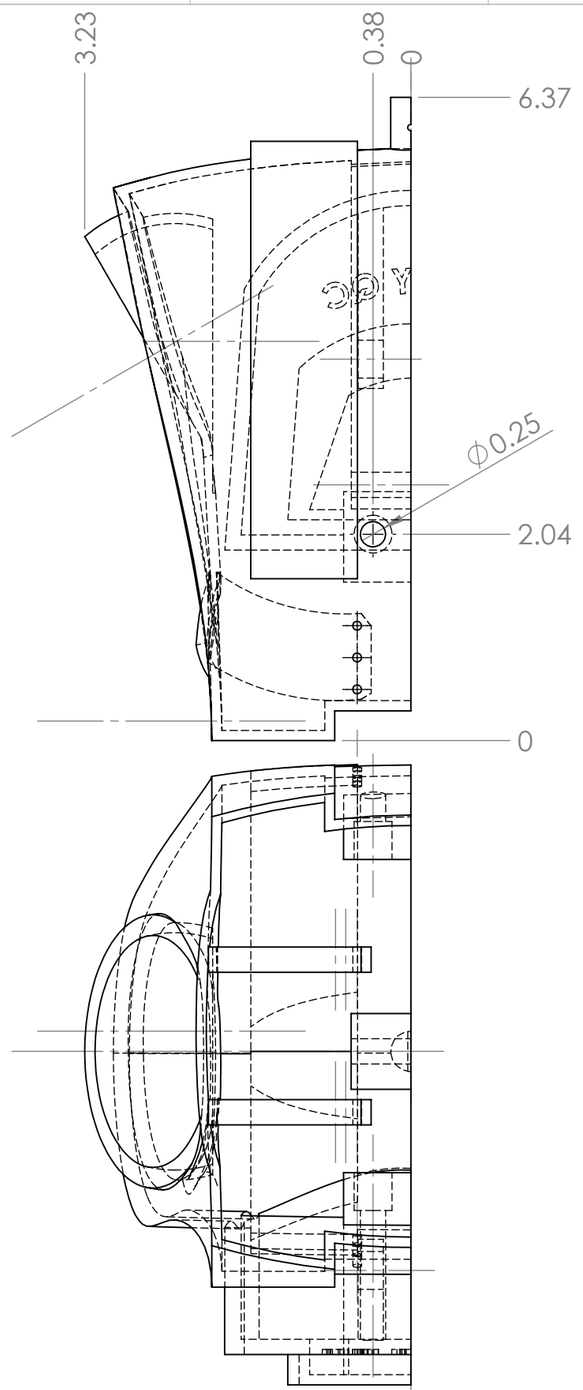

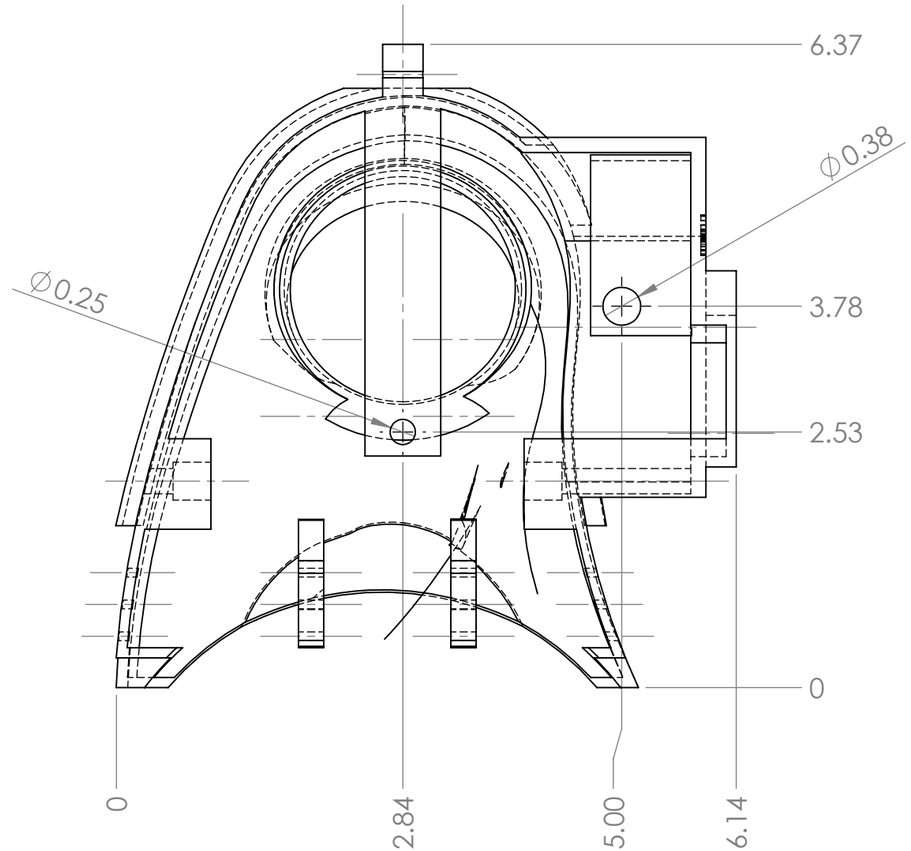

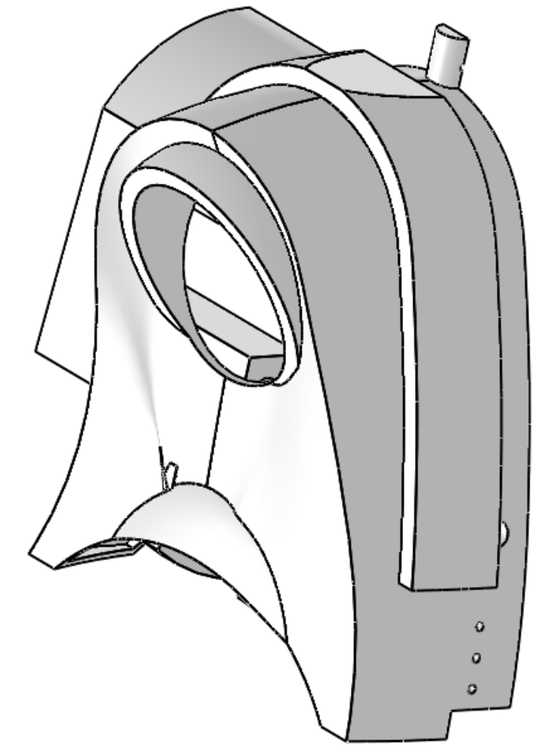

QTY: 1

SEE JIMMYQC_9006L_TORSO.SLDPRT FOR FULL GEOMETRY

DRILL OUT INDICATED HOLES TO SIZE

UNLESS OTHERWISE SPECIFIED:			
DIMENSIONING AND TOLERANCING PER ASME Y14.5M-1994.	PERPENDICULARITY:	⊥ 0.001" / INCH	
DIMENSIONS ARE IN INCHES.	CONCENTRICITY:	◎ 0.002" T.I.R.	
DE-BURR AND BREAK ALL SHARP EDGES .003 MIN.	PARALLELISM:	// 0.001" / INCH	
TOLERANCES ARE: X.XX = ±0.01, X.XXX = ±0.005, X.XXXX= ±0.001, ANGLES: ±0.5°	FLATNESS:	▱ 0.001" / INCH	
	ROUGHNESS:	125 √	

Franklin W. Olin College of Engineering

TITLE: **LEFT TORSO HALF**

MATERIAL: **3D PRINTED ABS**

FINISH: **AS PRINTED**

NOTICE
THIS DRAWING IS FOR MECH-DESIGN USE AND CAN BE REDISTRIBUTED AND REUSED AT WILL.

	INIT.	DATE
ENGINEER	CF	12/11/13
DRAWN	CF	12/13/13
CHECKED	JB	12/13/13

SIZE: **B** | DWG. NO. **JimmyQC_7006L_Torso** | REV **B**

SCALE: 2:3 | DO NOT SCALE PRINT | SHEET 1 OF 1

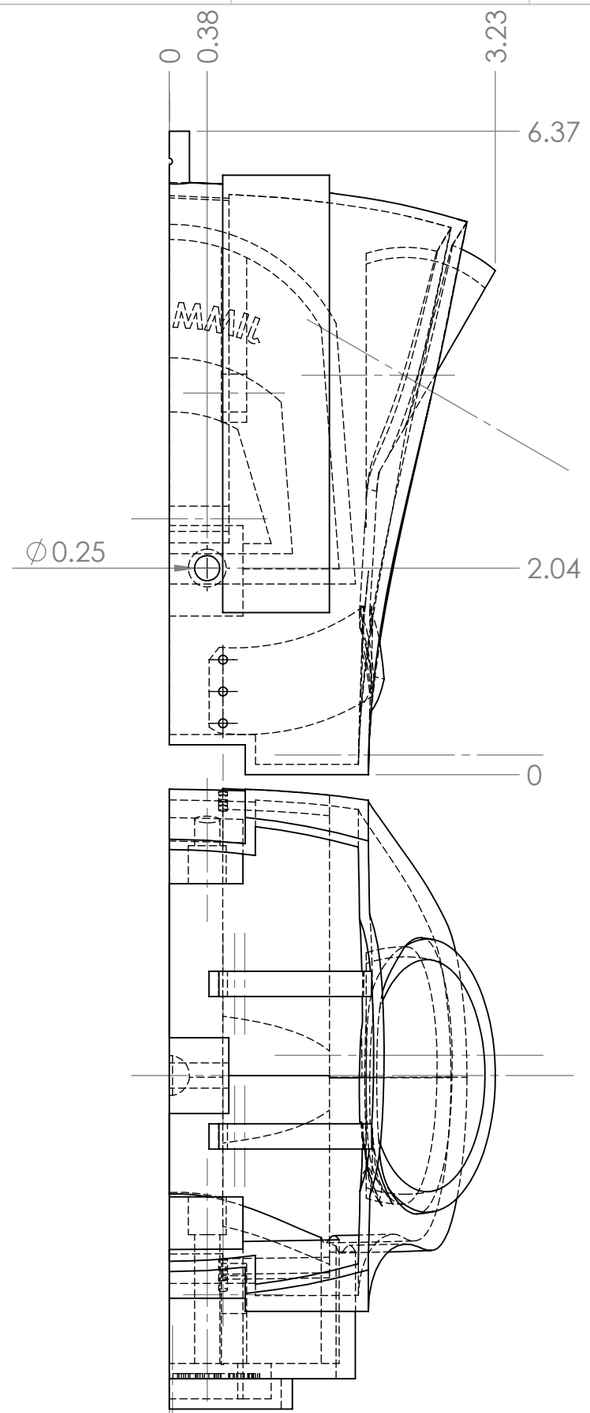

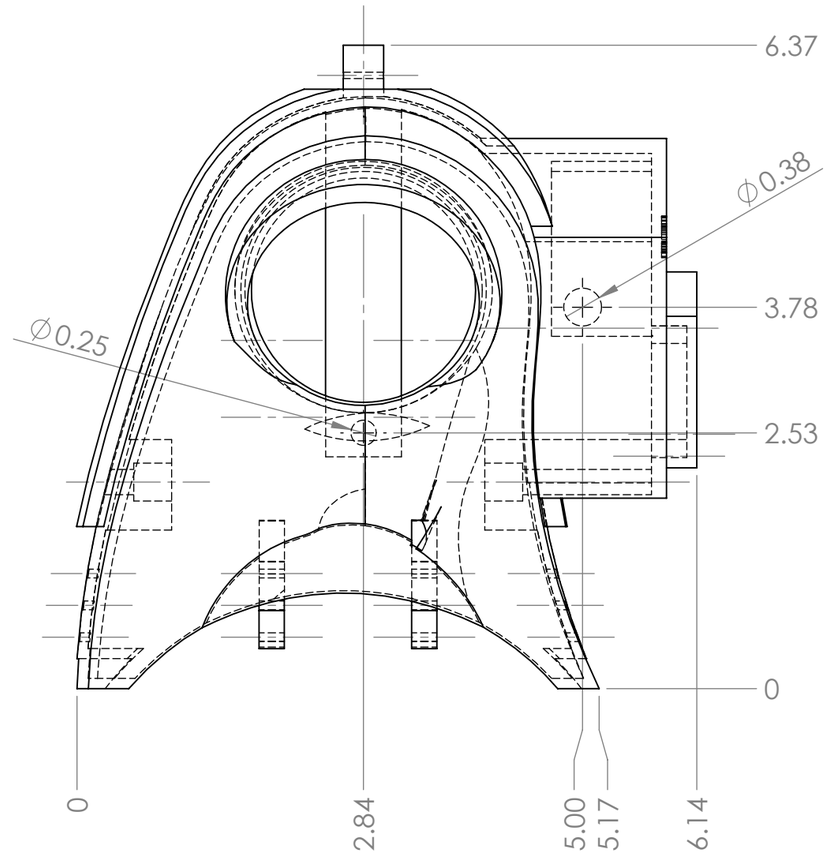

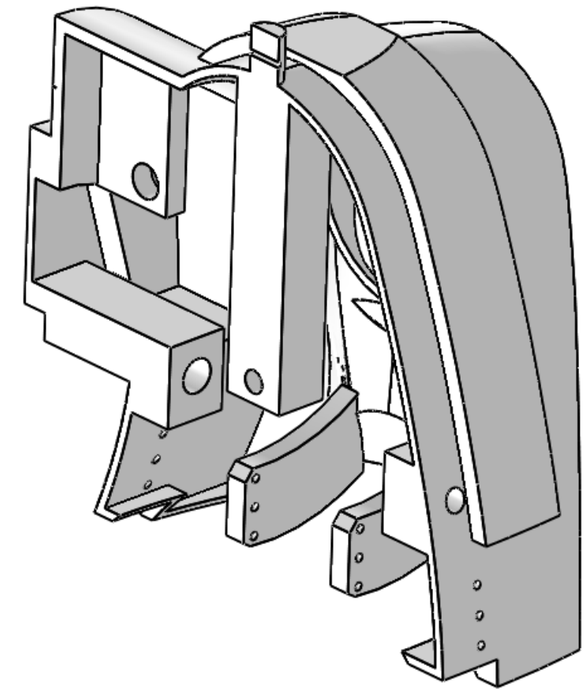

QTY: 1

SEE JIMMYQC_9006R_TORSO.SLDPRT FOR FULL GEOMETRY

DRILL OUT INDICATED HOLES TO SPECIFIED SIZES

UNLESS OTHERWISE SPECIFIED:			
DIMENSIONING AND TOLERANCING PER ASME Y14.5M-1994.	PERPENDICULARITY:	⊥ 0.001" / INCH	
DIMENSIONS ARE IN INCHES.	CONCENTRICITY:	◎ 0.002" T.I.R.	
DE-BURR AND BREAK ALL SHARP EDGES .003 MIN.	PARALLELISM:	// 0.001" / INCH	
TOLERANCES ARE: X.XX = ±0.01, X.XXX = ±0.005, X.XXXX= ±0.001, ANGLES: ±0.5°	FLATNESS:	▱ 0.001" / INCH	
	ROUGHNESS:	125 √	

Franklin W. Olin College of Engineering

TITLE: **RIGHT TORSO HALF**

MATERIAL: **3D PRINTED ABS**

FINISH: **AS PRINTED**

NOTICE
THIS DRAWING IS FOR MECH-DESIGN USE AND CAN BE REDISTRIBUTED AND REUSED AT WILL.

	INIT.	DATE
ENGINEER	CF	12/10/13
DRAWN	CF	12/13/13
CHECKED	JB	12/13/13

SIZE	DWG. NO.	REV
B	JimmyQC_7006R_Torso	B

SCALE: 2:3 | DO NOT SCALE PRINT | SHEET 1 OF 1